Genie®
A TEREX COMPANY

Operator's Manual

GTH-644
GTH-844

with
Maintenance
Information

Second Edition
First Printing
Part No. T109021

Important

Read, understand and obey these safety rules and operating instructions before operating this machine. Only trained and authorized personnel shall be permitted to operate this machine. This manual should be considered a permanent part of your machine and should remain with the machine at all times. If you have any questions, call Genie Industries.

Contents

Page
Introduction 1
Symbol and Hazard Pictorials Definitions 3
General Safety 5
Work Area Safety 11
Legend 16
Controls 17
Inspections 20
Operating Instructions 34
Transport Instructions 42
Maintenance 43
Specifications 46

Contact us:

Internet: www.genielift.com
E-mail: awp.techpub@terex.com

Copyright © 2010 by Genie Industries

Second Edition:First Printing, December 2010

"Genie" is a registered trademark of Genie Industries in the U.S.A. and many other countries. "GTH" is a trademark of Genie Industries.

Printed on recycled paper

Printed in U.S.A.

Introduction

Owners, Users and Operators:

Genie appreciates your choice of our machine for your application. Our number one priority is user safety, which is best achieved by our joint efforts. We feel that you make a major contribution to safety if you, as the equipment users and operators:

1 **Comply** with employer, job site and governmental rules.

2 **Read, understand and follow** the instructions in this and other manuals supplied with this machine.

3 **Use good safe work practices** in a common sense way.

4 **Be alert** and free from the influences of alcohol, drugs or medications that might affect eyesight, hearing, reactions or judgement.

5 **Only have trained/certified operators,** directed by informed and knowledgeable supervision, running the machine.

If there is anything in this manual that is not clear or which you believe should be added, please contact us.

Internet: www.genielift.com

E-mail: awp.techpub@terex.com

Danger

Failure to obey the instructions and safety rules in this manual will result in death or serious injury.

Do Not Operate Unless:

☑ You learn and practice the principles of safe machine operation contained in this operator's manual.

1 Avoid hazardous situations.

Know and understand the safety rules before going on to the next section.

2 Always perform a pre-operation inspection.

3 Always perform function tests prior to use.

4 Inspect the workplace.

5 Only use the machine as it was intended.

☑ You read, understand and obey the manufacturer's instructions and safety rules—safety and operator's manuals and machine decals.

☑ You read, understand and obey employer's safety rules and worksite regulations.

☑ You read, understand and obey all applicable governmental regulations.

☑ You are properly trained to safely operate the machine.

Introduction

Standards

Many aspects of rough terrain forklift operation and testing are discussed in standards published by the American National Standards Institute and the Industrial Truck Standards Development Foundation. These standards are updated on a regular basis with addenda. Genie recommends that you obtain and refer to the following standards.

ANSI/ITSDF B56.6 – Rough Terrain Fork Lifts

This Standard can be downloaded from www.ITSDF.org

ITSDF
1750 K Street NW
Site 460
Washington DC 20006

Intended Use

A variable reach rough terrain forklift truck is defined as a wheeled type truck with a pivoting boom, which may be equipped with various attachments for picking, transporting and placing loads within the established load range charts.

Hazard Classification

Genie uses symbols, color coding and signal words to identify the following:

⚠	Safety alert symbol—used to alert you to potential personal injury hazards. Obey all safety messages that follow this symbol to avoid possible injury or death.
⚠ DANGER Red	Indicates a hazardous situation which, if not avoided, will result in death or serious injury.
⚠ WARNING Orange	Indicates a hazardous situation which, if not avoided, could result in death or serious injury.
⚠ CAUTION Yellow	Indicates a hazardous situation which, if not avoided, could result in minor or moderate injury.
NOTICE Blue	Indicates a property damage message.

Safety Sign Maintenance

Replace any missing or damaged safety signs. Keep operator safety in mind at all times. Use mild soap and water to clean safety signs. Do not use solvent-based cleaners because they may damage the safety sign material.

Symbol and Hazard Pictorials Definitions

Hazard Pictorial Descriptions

Electrocution Hazard	Maintain required clearance.	Falling Object Hazard	No people under load.	Fall Hazard
No riders.	Crush Hazard	Operate from operator's station.	Bodily Injury Hazard	Always wear seat belt.
Injection Hazard	Use cardboard to search for leaks.	Overturning Hazard	Read the operator's manual.	Crush Hazard
Keep away from moving parts.	Crush Hazard	Keep clear of moving parts.	Crush Hazard	Lower forks. Set parking brake.
Burn Hazard	Allow system to cool.	Overturning Hazard	Sway operation	Explosion/Burn Hazard
No smoking. No open flame.	Burn Hazard	Allow surfaces to cool.	Crush Hazard	Support boom when performing maintenance.

Symbol and Hazard Pictorials Definitions

Hazard Pictorial Descriptions

Crush Hazard	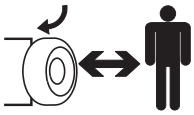 Keep away from moving parts.	Overturning Hazard	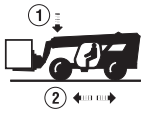 Keep load low.	

General Safety

Safety signs and locations

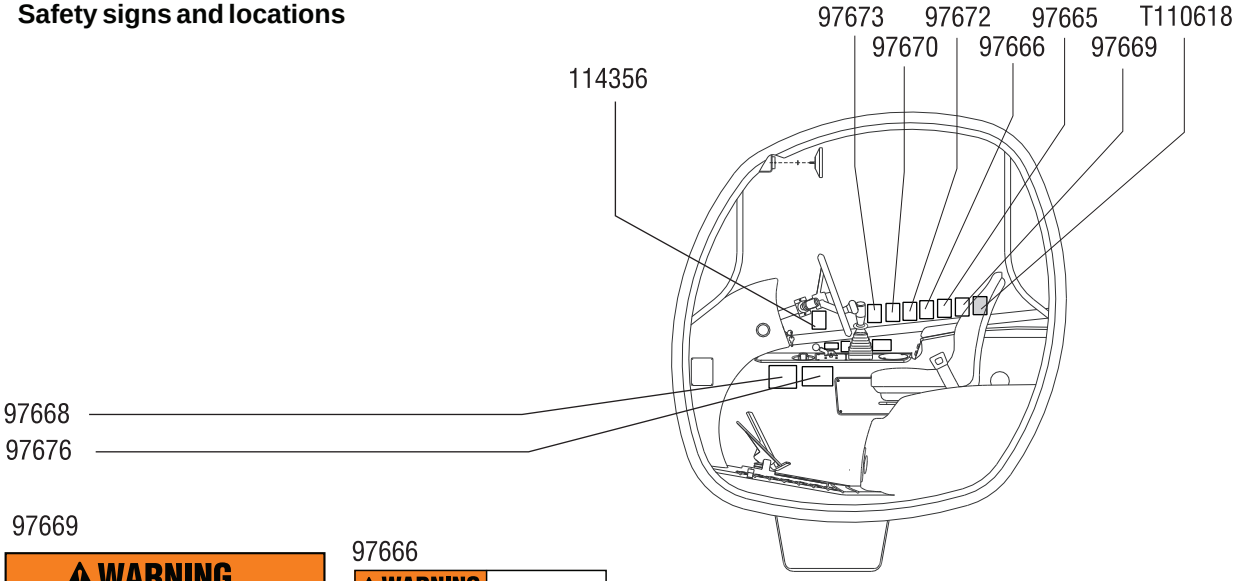

97669

WARNING

Falling Object Hazard
Death or Serious Injury can result from falling objects.

Do not operate machine while people are under or near elevated boom whether boom is loaded or unloaded.

97669 D

97666

WARNING

Improper operation or maintenance can result in serious injury or death.

Read and understand operator's manual and all safety signs before using or maintaining machine.

If you do not understand the information in the manuals, consult your supervisor, the owner or the manufacturer.

97666 B

97668

WARNING

Overturning Hazard
Death or Serious Injury can result from overturning forklift.

Never exceed published capacity or extend load beyond load chart band.

Never lower maximum load before retracting boom.

Do not travel on terrain or in areas that could cause machine to overturn.

Always level machine using sway control before raising boom above horizontal.

When driving, keep boom at or below horizontal and keep load close to the ground.

97668 B

97665

WARNING

Bodily Injury Hazard
Death or serious injury can result from failure to wear seat belt.

This machine is equipped with a Roll Over Protection System (ROPS).

Always adjust seat and fasten seat belt before starting engine.

97665 B

97673

DANGER

Death or Serious Injury can result from handling of personnel with this machine.

Never equip machine with any form of personnel platform or allow personnel to ride on attachment.

97673 B

97672

DANGER

Crush Hazard
Death or Serious Injury can result from people riding on this machine other than at the operator's station.

No passengers are permitted to ride on this machine or any attachment.

97672 B

97676

DANGER

Electrocution Hazard
Death or serious injury can result from contacting electric power lines.

Always contact the electric power line owner. The electric power shall be disconnected or the power lines moved or insulated before machine operations begin.

Maintain required clearance.

Power Line Voltage	Required Clearance
0 to 50 kV	10 ft / 3,03 m
50 to 200 kV	15 ft / 4,60 m
200 to 350 kV	20 ft / 6,10 m
350 to 500 kV	25 ft / 7,62 m
500 to 750 kV	35 ft / 10,67 m
750 to 1000 kV	45 ft / 13,72 m

97676 C

T110618

WARNING

Tip-over Hazard
Improper use of sway control can result in death or serious injury.

Never operate sway control when boom is above horizontal position.

Do not use sway control to position an elevated load.

Read and understand operator's manual and all safety signs before using or maintaining machine.

T110618 A

114356

WARNING

Overturning Hazard
Death or serious injury can result from using this machine without a load chart.

Never operate the machine if the load chart is missing.

114356 B

97670

DANGER

Crush Hazard
Death or serious injury could result from rolling of an unattended machine.

Set parking brake, lower carriage or attachment to ground before leaving machine.

97670 B

General Safety

Safety signs and locations

97673

97674

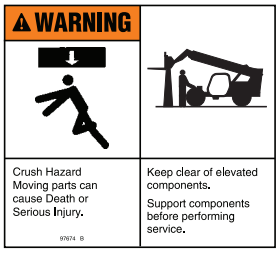

114374

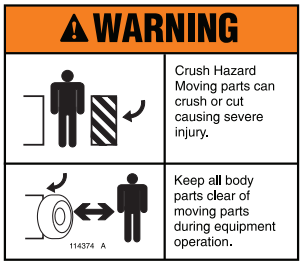

28162

97675

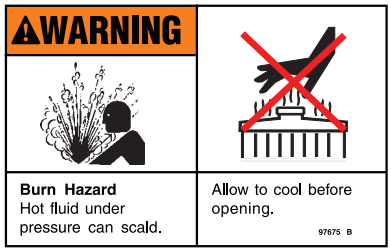

T110619

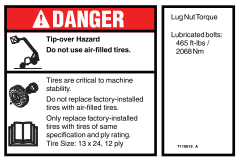

T110620

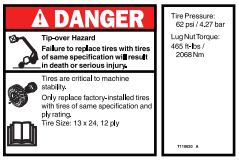

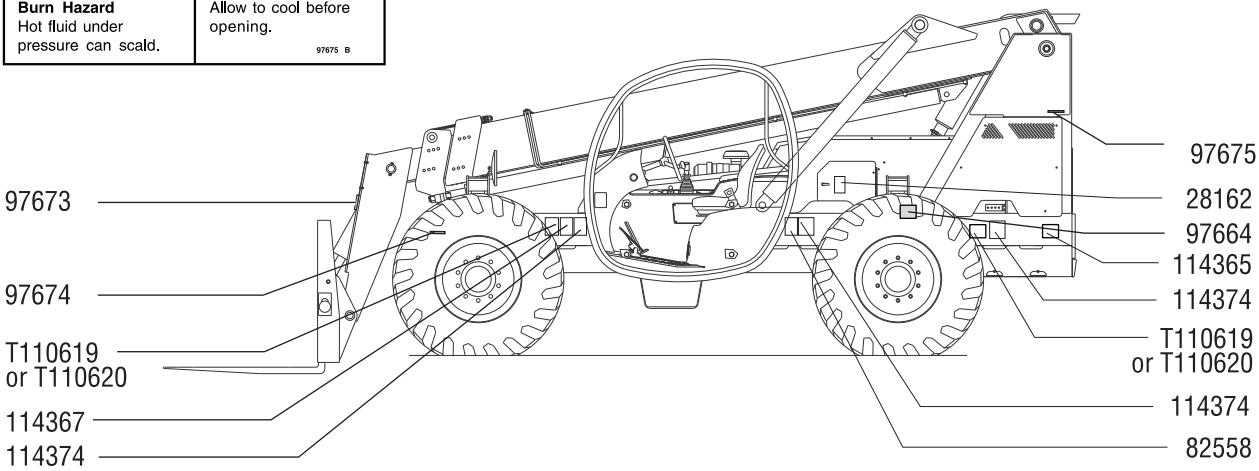

82558

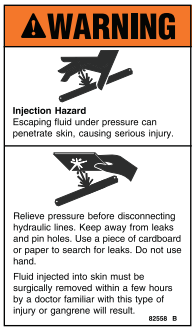

97664

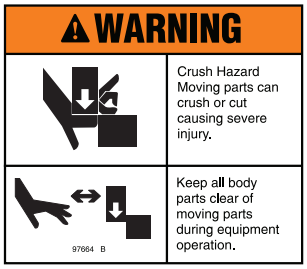

114365

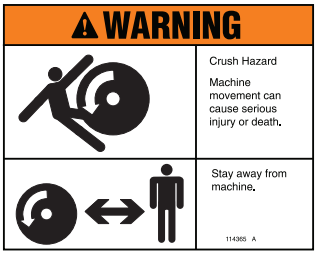

114367

General Safety

Safety signs and locations

82558

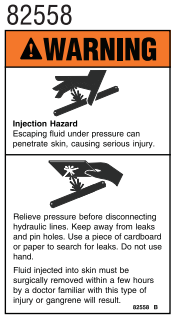

114374

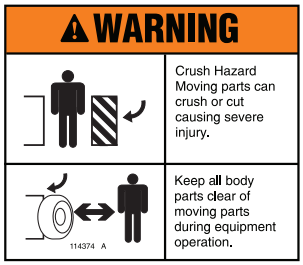

114365

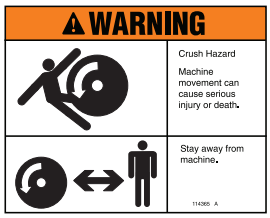

114367

28162

31788

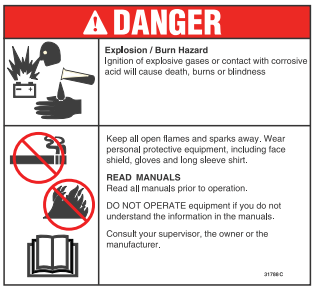

28175

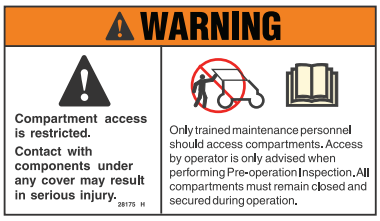

T110619

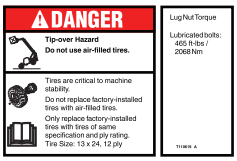

97667

97664

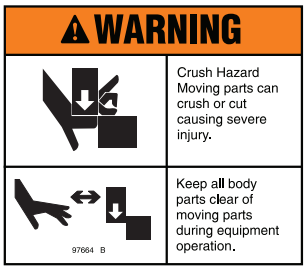

133059

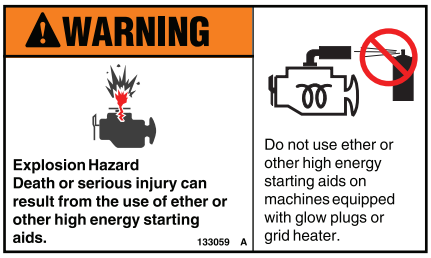

T110620

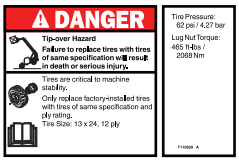

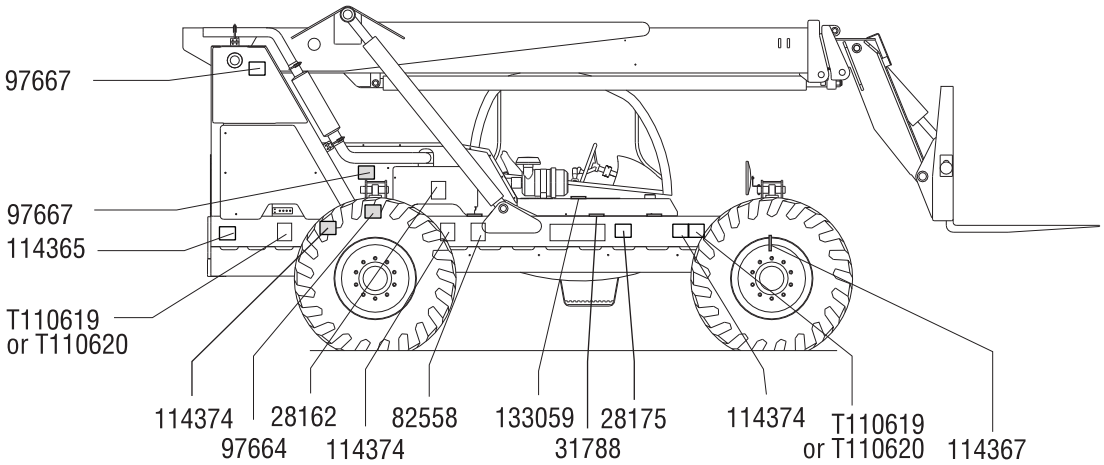

General Safety

Safety signs and locations

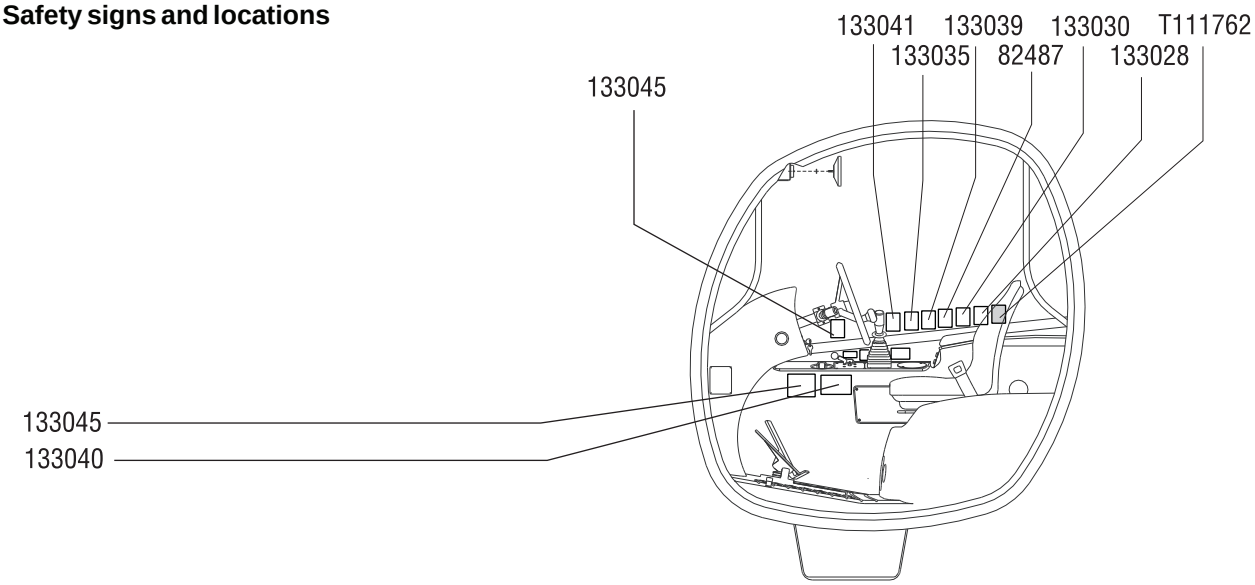

T111762

133045

133041

133035

133028

133039

133030

133040

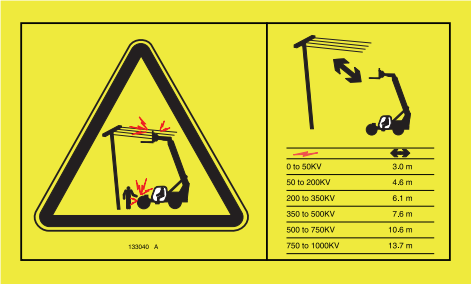

82487

General Safety

Safety signs and locations

133041

133038

133034

133031

82560

114391

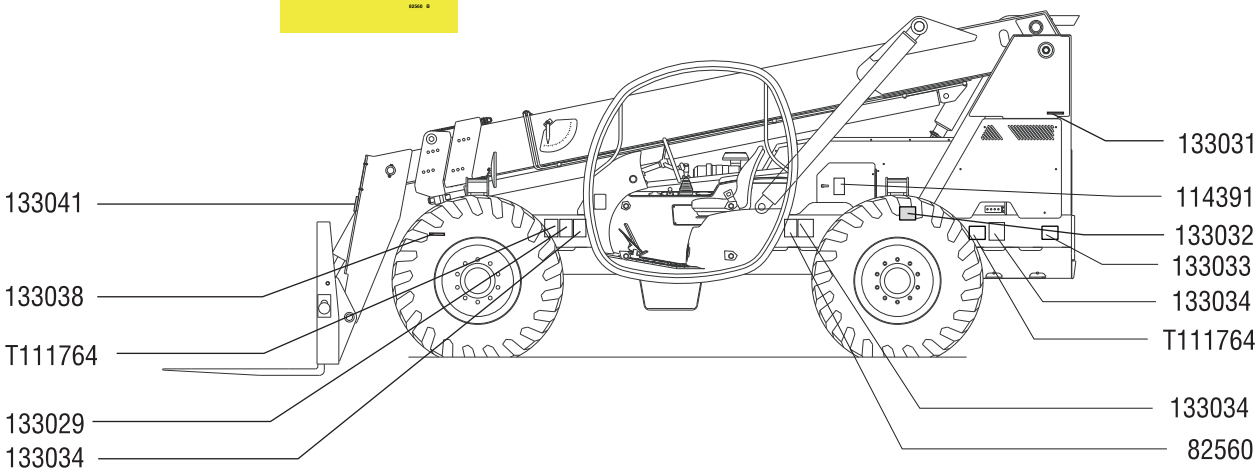

133032

133033

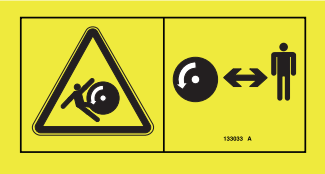

133029

82560

T111764

General Safety

Safety signs and locations

133031

133034

82560

133033

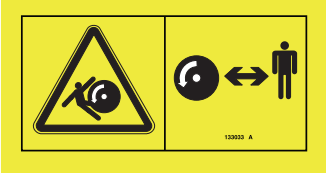

133029

82481

82473

133032

T111764

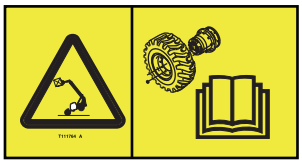

114391

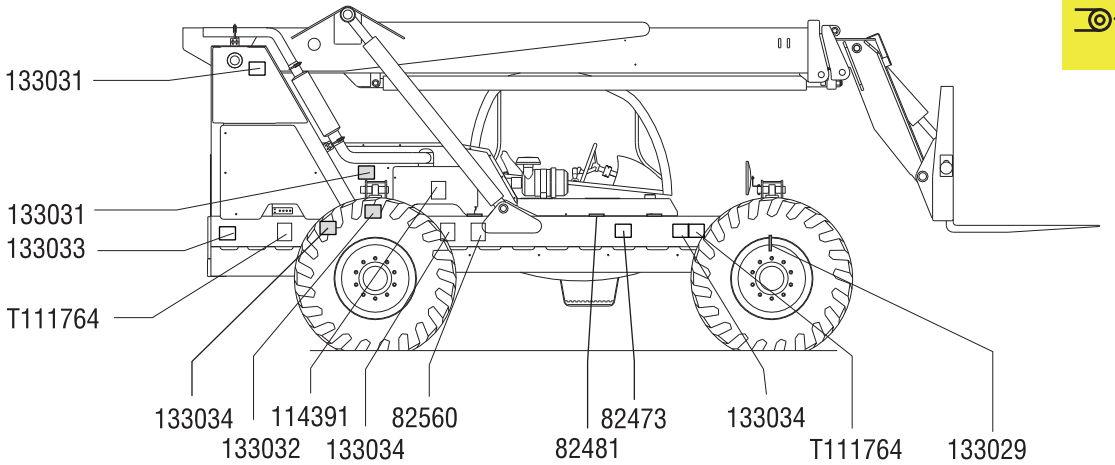

Work Area Safety

Overturning Hazards

Using the load chart, confirm that the load is within the rated capacity of the machine. Do not exceed the rated load.

Do not raise the load unless the ground can support all forces imposed by the machine.

Do not lower a load without retracting the boom first.

Do not operate the machine if the load chart is missing.

Do not exceed the rated capacity for each configuration.

Do not raise the boom unless the machine is level. The machine level indicator should be at zero degrees.

Do not level the machine using the frame sway control unless the boom angle indicator is at zero degrees or less.

Do not use the sway control to position an elevated load.

Do not raise a load and then drive to position it.

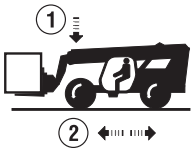

When driving, keep the boom at or below horizontal and keep the load close to the ground.

Do not push the hydraulic disable button while traveling. An immediate loss of hydraulic power will result and the parking brake will apply suddenly.

Operate the machine at speeds that will keep the load under control. Start and stop movements smoothly.

Do not raise a load unless the load is properly positioned or secured on the forks or approved attachment.

Do not operate the machine in strong or gusty winds. Do not increase the surface area of the carriage or the load. Increasing the area exposed to the wind will decrease machine stability.

Use extreme care and slow speeds while driving the machine in the travel position across uneven terrain, debris, unstable or slippery surfaces and near holes and drop-offs.

Do not alter or disable machine components that in any way affect safety or stability.

Do not replace items critical to machine stability with items of different weight or specification.

Do not replace factory-installed tires with tires of different specification or ply rating.

Do not replace factory-installed ballast-filled tires with air-filled tires. Wheel weight is critical to stability.

Air-filled tires must be factory-installed. Machine equipped with air-filled tires are also equipped with additional counterweight. Do not replace standard factory-installed tires with air-filled tires.

Work Area Safety

Traveling on Slopes

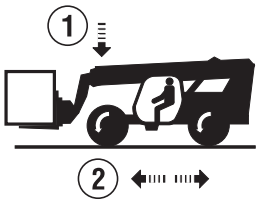

When driving, keep the boom at or below horizontal and keep the load close to the ground.

When the machine is loaded, always travel with the load uphill. When the machine is unloaded, travel with the forks or attachment downhill.

On steep terrain, drive only up and down a hill, and always keep the machine in gear. Do not turn across the slope when the machine is traveling up or down a slope.

Limit travel path and speed according to the condition of the ground surface, traction, slope, location of personnel and any other factors which may create a hazard. Never drive the machine unless the boom and equipment are in their proper travel position.

Whether a machine will tip over during dynamic machine operation involves many factors that need to be considered. Among these are pavement/ground conditions, stability and slope, as well as machine equipment, operator skill, load position, tire inflation, machine speed, etc.

Additionally, tip-over of a machine is dependent in large part upon operator inputs such as the speed and smoothness of the operation, as well as the position of the attachment and its load.

Construction sites and roads will frequently change slope from place to place, can be hard and soft, and change due to construction activities and weather.

Operators should be properly trained and use their best judgment and experience to take the necessary precautions to prevent a tip-over.

Operators must assess the job site variables and avoid exceeding the machine's (or operator's) capabilities for terrain and conditions.

Fall Hazards

Always wear a seat belt when operating the machine.

Always remain completely inside the cab when operating the machine.

When getting in and out of the cab, face the machine, use the steps and handrails provided and always maintain three-point contact.

Do not use the steering wheel or any other controls as handrails.

Do not allow riders on the machine or forks.

Do not transport or lift personnel with this machine.

Work Area Safety

Collision Hazards

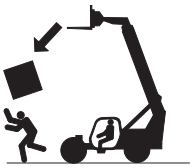

Keep people, equipment and material out of the work area. Do not operate the machine while people are under or near an elevated boom, whether it is loaded or unloaded.

Do not put the transmission into gear unless the parking brake is set.

Do not drive the machine if visibility is obstructed.

Do not raise the boom unless the parking brake is set.

Do not operate the machine with a faulty back-up alarm.

Operators must comply with employer, job site and governmental rules regarding the use of personal protective equipment.

Do not operate hydraulic disable button after engine has started.

Falling Object Hazards

Operate the machine at speeds that will keep the load under control. Start and stop movements smoothly.

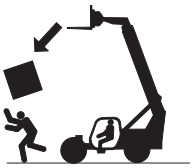

Keep people, equipment and material out of the work area. Do not operate the machine while people are under or near an elevated boom, whether it is loaded or unloaded.

Do not push the hydraulic disable button while traveling. An immediate loss of hydraulic power will result and the parking brake will apply suddenly.

Bodily Injury Hazard

Always adjust the seat and fasten the seat belt before starting the engine.

Do not operate the machine with a hydraulic oil or air leak. Escaping fluid under pressure can penetrate skin, causing serious injury. Relieve pressure before disconnecting hydraulic lines. Keep away from leaks and pin holes. Use a piece of cardboard or paper to search for leaks. Do not use your hand.

Fluid injected into skin must be surgically removed within a few hours by a doctor familiar with this type of injury or gangrene will result.

Work Area Safety

Always operate the machine in a well-ventilated area to avoid carbon monoxide poisoning.

Improper contact with components under any cover will cause serious injury. Only trained maintenance personnel should access compartments. Access by the operator is only advised when performing a pre-operation inspection. All compartments must remain closed and secured during operation.

⚠ Damaged Machine Hazards

Do not use a damaged or malfunctioning machine.

Conduct a thorough pre-operation inspection of the machine and test all functions before each work shift. Immediately tag and remove from service a damaged or malfunctioning machine.

Be sure all maintenance has been performed as specified in this manual and the appropriate Genie service manual.

Be sure all decals are in place and legible.

Be sure the operator's and safety manuals are complete, legible and in the storage container located in the cab.

Do not attempt to start the machine by towing or pushing.

Do not attempt to use the forks or attachments for prying wedged or frozen loads free.

⚠ Burn Hazards

Allow hot surfaces to cool before touching or servicing.

⚠ Component Damage Hazards

Do not use any battery or charger greater than 12V to jump-start the engine.

Do not use the machine as a ground for welding.

Do not steer the front tires on dry pavement when the axle differential lock is activated.

Do not lock the axle differential when the machine is moving.

⚠ Explosion and Fire Hazards

Do not start the engine if you smell or detect gasoline, diesel fuel or other explosive substances.

Do not refuel the machine with the engine running.

Refuel the machine and charge the battery only in an open, well-ventilated area away from sparks, flames and lighted tobacco.

Do not operate the machine in hazardous locations or locations where potentially flammable or explosive gases or particles may be present.

Do not spray ether into engines equipped with glow plugs or air intake grid heaters.

Work Area Safety

Electrocution Hazards

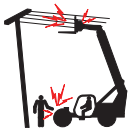

Maintain an appropriate clearance from electrical power lines. See the chart below for required clearance.

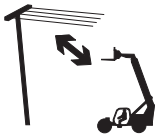

Line Voltage	Required Clearance	
0 to 50KV	10 ft	3.0 m
50 to 200KV	15 ft	4.6 m
200 to 350KV	20 ft	6.1 m
350 to 500KV	25 ft	7.6 m
500 to 750KV	35 ft	10.6 m
750 to 1000KV	45 ft	13.7 m

Do not use the machine as a ground for welding.

Always contact the electric power line owner. The electric power shall be disconnected or the power lines moved or insulated before machine operations begin.

Battery Safety

Burn Hazards

Batteries contain acid. Always wear protective clothing and eye wear when working with batteries.

Avoid spilling or contacting battery acid. Neutralize battery acid spills with baking soda and water.

Explosion Hazard

Keep sparks, flames and lighted tobacco away from batteries. Batteries emit explosive gas.

Electrocution Hazard

Avoid contact with electrical terminals.

Employer's Responsibilities

Employers are responsible for providing a safe work environment and for complying with local and national governmental regulations.

Legend

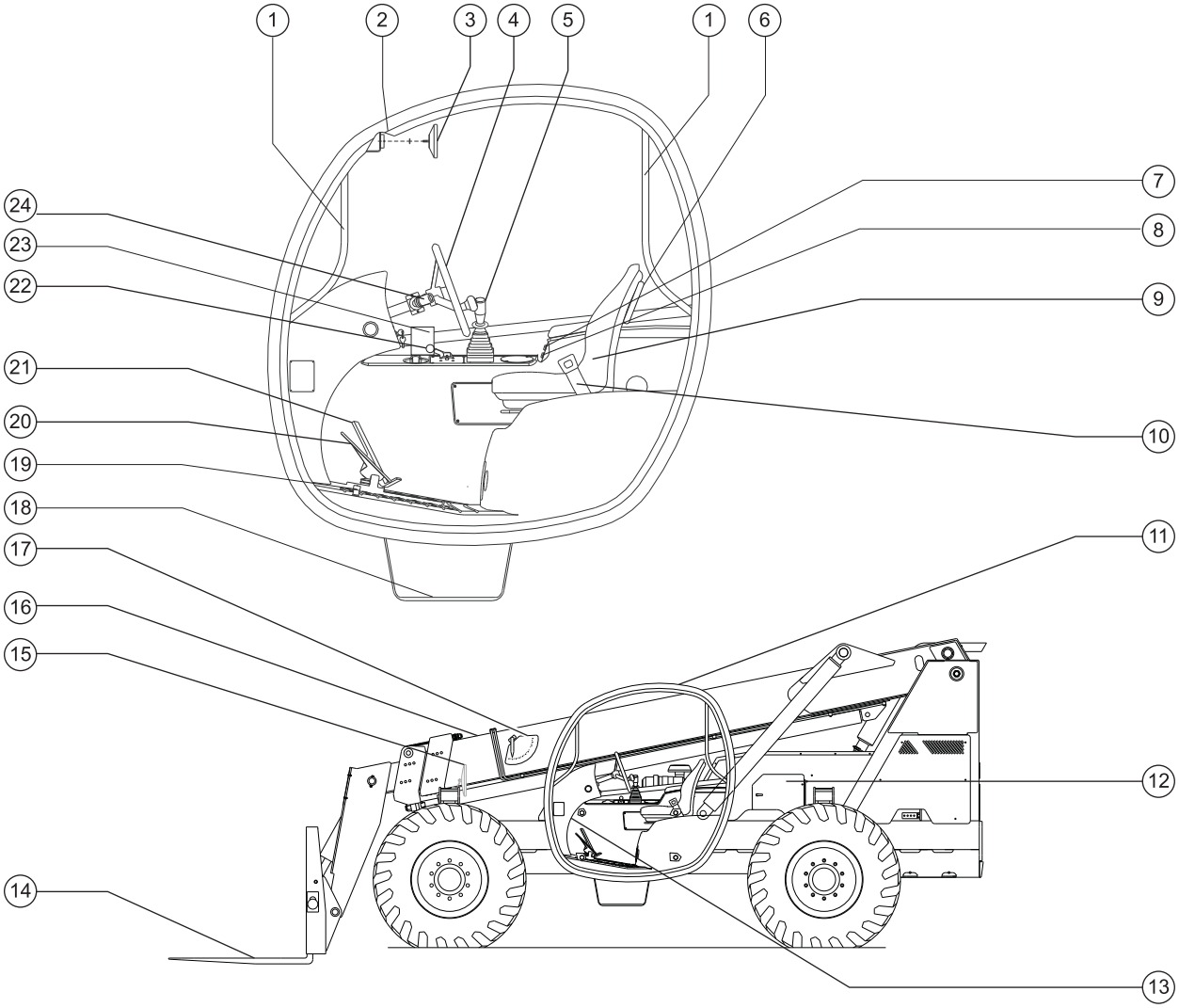

1 Hand rail
2 Machine level indicator
3 Interior rear view mirror
4 Steering wheel
5 Control handle
6 Operator's manual storage container
7 Sway control switch
8 Auxiliary hydraulics switch
9 Seat
10 Seat belt
11 Cab
12 Engine (under cover)
13 Fuse panel
14 Fork
15 External rear view mirror (on opposite side of machine)
16 Boom
17 Boom angle indicator
18 Step
19 Differential lock switch
20 Service brake pedal
21 Accelerator pedal
22 Steer selector switch
23 Load charts
24 Transmission control lever

Controls

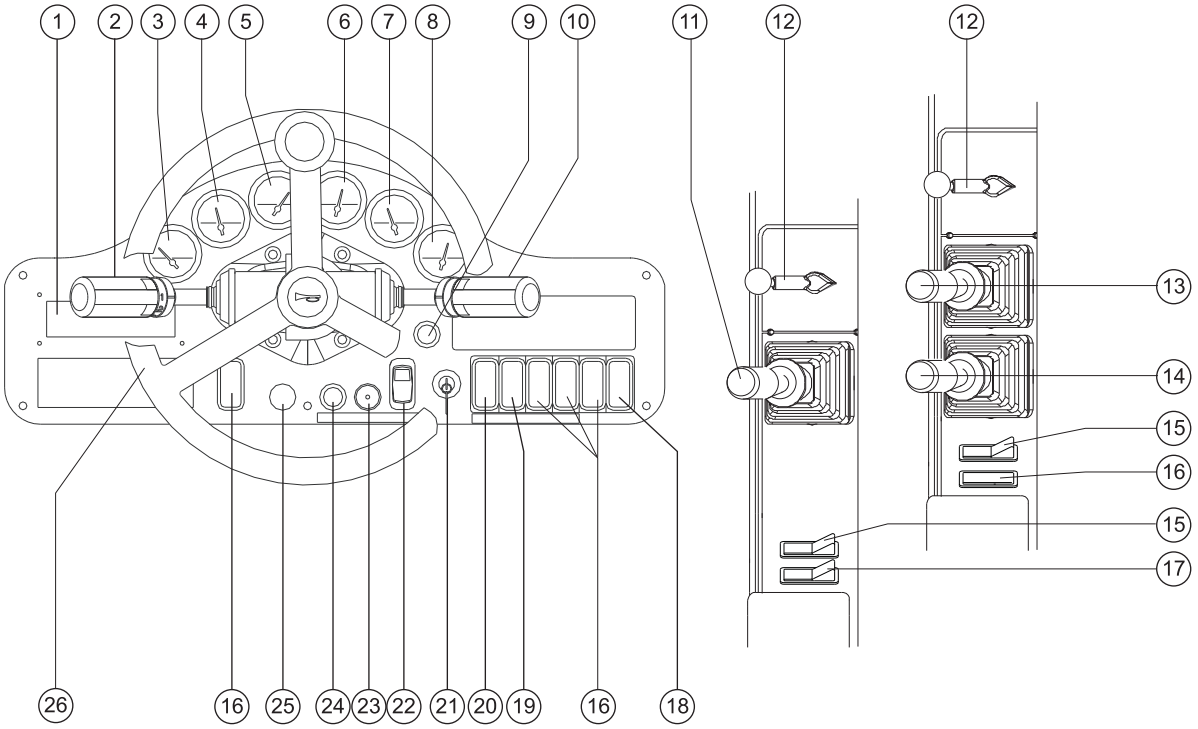

1 Heater controls

2 Transmission control lever

3 Fuel gauge

4 Engine water temperature gauge

5 Engine oil pressure gauge

6 Transmission oil temperature gauge

7 Transmission oil pressure gauge

8 Voltmeter

9 Front window wiper/washer switch

10 Turn signal and emergency flasher lever (if equipped)

11 Control handle with thumb switch (single control handle option)

12 Steer selector switch

13 Boom control handle (dual control handle option)

14 Tilt and sway control handle (dual control handle option)

15 Auxiliary hydraulics switch

16 Not used

17 Sway control switch (single control handle option)

18 Glow plug button (if equipped)

19 Road light switch (if equipped)

20 Work light switch (if equipped)

21 Ignition switch

22 Parking brake switch

23 Low brake pressure indicator light

24 Hydraulic disable button

25 Ether starting aid button (if equipped)

26 Steering wheel

Controls

1 Heater controls

2 Transmission control lever

Move the transmission control lever toward you and move it up for forward gear. Move the lever toward you and move it down for reverse gear. Move the lever to the center position for neutral. Turn the lever clockwise to shift to a lower speed. Turn the lever counterclockwise to shift to a higher speed.

If the boom is raised above 60°, the transmission will shift to neutral and the frame sway function will not operate.

3 Fuel gauge

4 Engine water temperature gauge

5 Engine oil pressure gauge

6 Transmission oil temperature gauge

7 Transmission oil pressure gauge

8 Voltmeter

9 Front window wiper/washer switch

Turn the switch clockwise one click for slow speed wiper operation. Turn the switch clockwise two clicks for fast speed wiper operation. Turn the switch counterclockwise to slow down or turn off the wiper.

10 Turn signal and emergency flasher lever (if equipped)

Move the lever away from you and move it up for the left turn signal. Move the lever toward you and move it down for right turn signal. Turn the lever clockwise to turn on the emergency flashers. Turn the lever counterclockwise to turn off the emergency flashers.

11 Control handle with thumb switch (single control handle option)

Pull the control handle back and the boom will raise. Push the control handle forward and the boom will lower. Push the control handle to the right and the boom will extend. Pull the control to the left and the boom will retract. Hold down the thumb switch and pull the control handle back and the forks will tilt up. Hold down the thumb switch and push the control handle forward and the forks will tilt down.

12 Steer selector switch

Move the steer selector switch forward to select four-wheel steer. Move the steer selector switch to the center to select two-wheel steer. Move the steer selector switch backward to select crab steer.

13 Boom control handle (dual control handle option)

Pull the control handle back and the boom will raise. Push the control handle forward and the boom will lower. Push the control handle to the right and the boom will extend. Pull the control to the left and the boom will retract.

14 Tilt and sway control handle (dual control handle option)

Pull the control handle back and the forks will tilt up. Push the control handle forward and the forks will tilt down. Push the control handle to the right and the machine will sway to the right. Pull the control handle to the left and the machine will sway to the left.

Controls

15 Auxiliary hydraulics switch

Push and hold the auxiliary hydraulics switch to provide hydraulic flow to powered attachments.

16 Not used

17 Sway control switch (single control handle option)

Push down on the right side of the rocker switch and the machine will sway to the right. Push down on the left side of the rocker switch and the machine will sway to the left.

18 Glow plug button (if equipped)

Push and hold the top of the glow plug switch for 10 seconds to turn on the glow plugs.

19 Road light switch (if equipped)

Push the top of the rocker switch to turn the road lights on. Push the bottom of the rocker switch to turn the road lights off.

20 Work light switch (if equipped)

Push the top of the rocker switch to turn the work lights on. Push the bottom of the rocker switch to turn the work lights off.

21 Ignition switch

Turn the key to the left to turn on the accessories. Turn the key to the start position to start the engine.

22 Parking brake switch

Push the top of the rocker switch to turn the parking brake on. Push the bottom of the switch to turn the parking brake off.

23 Low brake pressure indicator light

Light on indicates low brake pressure.

24 Hydraulic disable button

Press and hold the hydraulic disable button to disable the hydraulically controlled functions during startup in cold weather.

25 Ether starting aid button (if equipped)

Push and hold the ether starting aid button during cold engine start.

26 Steering wheel

Turn the steering wheel to the right to turn the front wheels to the right. Turn the steering wheel to the left to turn the front wheels to the left.

Inspections

Do Not Operate Unless:

☑ You learn and practice the principles of safe machine operation contained in this operator's manual.

1 Avoid hazardous situations.

2 Always perform a pre-operation inspection.

Know and understand the pre-operation inspection before going on to the next section.

3 Always perform function tests prior to use.

4 Inspect the workplace.

5 Only use the machine as it was intended.

Pre-operation Inspection Fundamentals

It is the responsibility of the operator to perform a pre-operation inspection and routine maintenance.

The pre-operation inspection is a visual inspection performed by the operator prior to each work shift. The inspection is designed to discover if anything is apparently wrong with a machine before the operator performs the function tests.

The pre-operation inspection also serves to determine if routine maintenance procedures are required. Only routine maintenance items specified in this manual may be performed by the operator.

Refer to the list on the next page and check each of the items.

If damage or any unauthorized variation from factory delivered condition is discovered, the machine must be tagged and removed from service.

Repairs to the machine may only be made by a qualified service technician, according to the manufacturer's specifications. After repairs are completed, the operator must perform a pre-operation inspection again before going on to the function tests.

Scheduled maintenance inspections shall be performed by qualified service technicians, according to the manufacturer's specifications.

Inspections

Pre-operation Inspection

- ❏ Be sure that the operator's and safety manuals are complete, legible and in the storage container located in the operator's compartment.
- ❏ Be sure that all decals are legible and in place. See Inspections section.
- ❏ Check for engine oil leaks and proper oil level. Add oil if needed. See Maintenance section.
- ❏ Check for hydraulic oil leaks and proper oil level. Add oil if needed. See Maintenance section.
- ❏ Check for engine coolant leaks and proper level of coolant. Add coolant if needed. See Maintenance section.
- ❏ Check for battery fluid leaks and proper fluid level. Add distilled water if needed. See Maintenance section.
- ❏ Air-filled tire models: Check for proper tire pressure. Add air if needed. See Maintenance section.

Check the following components or areas for damage, improperly installed or missing parts and unauthorized modifications:

- ❏ Electrical components, wiring and electrical cables
- ❏ Hydraulic hoses, fittings, cylinders and manifolds
- ❏ Fuel and hydraulic tanks
- ❏ Drive motors and drive hubs
- ❏ Boom wear pads
- ❏ Tires and wheels
- ❏ Engine and related components
- ❏ Limit switches
- ❏ Steer and axle sensors
- ❏ Lights, alarms and beacons (if equipped)
- ❏ Pins, nuts, bolts and other fasteners

Extend the boom and check entire machine for:

- ❏ Cracks in welds or structural components
- ❏ Dents or damage to machine
- ❏ Excessive rust, corrosion or oxidation

- ❏ Be sure that all structural and other critical components are present and all associated fasteners and pins are in place and properly tightened.
- ❏ Be sure the windshield and windows (if equipped) are clean and free of obstructions that might limit visibility.
- ❏ After you complete your inspection, be sure that all guards, screens and compartment covers are in place and secured.

Inspections

Do Not Operate Unless:

☑ You learn and practice the principles of safe machine operation contained in this operator's manual.

1 Avoid hazardous situations.

2 Always perform a pre-operation inspection.

3 Always perform function tests prior to use.

Know and understand the function tests before going on to the next section.

4 Inspect the workplace.

5 Only use the machine as it was intended.

Function Test Fundamentals

The function tests are designed to discover any malfunctions before the machine is put into service. The operator must follow the step-by-step instructions to test all machine functions.

A malfunctioning machine must never be used. If malfunctions are discovered, the machine must be tagged and removed from service. Repairs to the machine may only be made by a qualified service technician, according to the manufacturer's specifications.

After repairs are completed, the operator must perform a pre-operation inspection and function tests again before putting the machine into service.

Function Tests

1 Select a test area that is firm, level and free of obstruction. Be sure there is no load on the forks or attachment.

2 Enter the operator's compartment and sit on the seat.

3 Fasten the seat belt.

4 Adjust the interior rear view mirror and the exterior right hand mirror, if required.

5 Be sure the parking brake is on and the transmission control is in neutral.

6 Start the engine. See Starting the Engine in the Operating Instructions section.

Inspections

Test the Single Control Handle (if equipped)

7 Using the control handle, momentarily raise the boom, extend the boom, retract the boom and lower the boom.

⊙ Result: All functions should operate smoothly.

8 Using the control handle and the thumb switch, momentarily tilt the forks up and tilt the forks down.

⊙ Result: The function should operate smoothly.

Test the Dual Control Handles (if equipped)

9 Using the boom control handle, momentarily raise the boom, extend the boom, retract the boom and lower the boom.

⊙ Result: All functions should operate smoothly.

10 Using the tilt and sway control handle, momentarily tilt the forks up and tilt the forks down.

⊙ Result: The function should operate smoothly.

11 Using the tilt and sway control handle, momentarily sway the machine to the right and to the left.

⊙ Result: The frame level function should operate smoothly.

Test the Sway Control (if equipped with single control handle)

12 Push the right side of the sway control rocker switch.

⊙ Result: The machine should sway to the right.

13 Push the left side of the sway control rocker switch.

⊙ Result: The machine should sway to the left.

Test the Steering

14 Move the steer selector switch to select four-wheel steer.

15 Check the steering operation by turning the steering wheel approximately 1/4 turn in each direction.

⊙ Result: The front wheels should turn in the same direction as the steering wheel. The rear wheels should turn in the opposite direction.

16 Straighten the wheels.

17 Move the steer selector switch to the middle position to select two-wheel steer.

18 Check the steering operation by turning the steering wheel approximately 1/4 turn in each direction.

⊙ Result: The front wheels should turn in the same direction as the steering wheel. The rear wheels should not turn.

19 Straighten the wheels.

20 Move the steer selector switch to select crab steer.

21 Check the steering operation by turning the steering wheel approximately 1/4 turn in each direction.

⊙ Result: The front wheels and rear wheels should turn in the same direction as the steering wheel.

Inspections

Test the Transmission and Brakes

22 Be sure the boom is fully lowered and retracted.

23 Step on the service brake pedal.

24 Move the transmission control lever to forward. Slowly let up on the service brake pedal. As soon as the machine starts to move, push the service brake pedal.

⊙ Result: The machine should move forward, then come to an abrupt stop.

25 Move the transmission control lever to reverse. Slowly let up on the service brake pedal. As soon as the machine starts to move, push the service brake pedal.

⊙ Result: The machine should move in reverse, then come to an abrupt stop. The back-up alarm should sound when the transmission control lever is in reverse.

26 Move the transmission control lever to neutral.

27 Push the top of the parking brake switch.

⊙ Result: The red parking brake indicator light should come on, indicating the parking brake is on.

28 Move the transmission control lever forward, then in reverse.

⊙ Result: The machine should not move.

Test Auxilliary Hydraulics (if equipped with swing or rotate carriage)

29 Using the auxiliary hydraulics switch, momentarily rotate the carriage to the right and to the left.

⊙ Result: The function should operate smoothly.

Test the Drive and Sway Cutout

30 Raise the boom above 60 degrees.

31 Step on the service brake pedal.

32 Push the bottom of the parking brake switch to release the parking brake.

33 Put the transmission control lever in forward. ⚠ Slowly let up on the service brake pedal.

⊙ Result: The drive function should not work.

34 Put the transmission lever in neutral. Step on the service brake pedal and apply the parking brake.

35 ⚠ Slowly sway the machine to the left and to the right.

⊙ Result: The sway function should not work.

Test the Road Lights

36 Verify that all lights are functional.

Inspections

Do Not Operate Unless:

☑ You learn and practice the principles of safe machine operation contained in this operator's manual.

1 Avoid hazardous situations.

2 Always perform a pre-operation inspection.

3 Always perform function tests prior to use.

4 Inspect the workplace.

Know and understand the workplace inspection before going on to the next section.

5 Only use the machine as it was intended.

Fundamentals

The workplace inspection helps the operator determine if the workplace is suitable for safe machine operation. It should be performed by the operator prior to moving the machine to the workplace.

It is the operator's responsibility to read and remember the workplace hazards, then watch for and avoid them while moving, setting up and operating the machine.

Workplace Inspection

Be aware of and avoid the following hazardous situations:

- drop-offs or holes
- bumps, floor obstructions or debris
- sloped surfaces
- unstable or slippery surfaces
- overhead obstructions and high voltage conductors
- hazardous locations
- inadequate surface support to withstand all load forces imposed by the machine
- wind and weather conditions
- the presence of unauthorized personnel
- other possible unsafe conditions

Inspections

Inspection for Decals with Words

Determine whether the decals on your machine have words or symbols. Use the appropriate inspection to verify that all decals are legible and in place.

Part No.	Description	Quantity
28159	Label - Diesel	1
28162	Warning - Bodily Injury Hazard	2
28175	Warning - Compartment Access	1
31788	Danger - Explosion/Burn Hazard	1
82366	Label - Chevron Rando	1
82558	Warning - Injection Hazard	2
97664	Warning - Crush Hazard, Moving Parts	2
97665	Warning - Bodily Injury Hazard	1
97666	Warning - Improper Operation	1
97667	Warning - Burn Hazard *Perkins models: decals on right side **JD models: decals on left side	2
97668	Warning - Overturning Hazard	1
97669	Warning - Falling Object Hazard	1
97670	Warning - Crush Hazard, Parking Brake	1
97672	Danger - Crush Hazard, No Riders	1
97673	Danger - Fall Hazard, No Riders	2
97674	Warning - Crush Hazard, Overhead Parts	1
97675	Warning - Burn Hazard, Hot Components	1
97676	Danger - Electrocution Hazard	1
114057	Cosmetic - Genie GTH-844	2
114059	Cosmetic - Genie GTH-644	2
114062	Cosmetic - GTH-844	2
114083	Cosmetic - Genie Logo	2
114087	Cosmetic - GTH-644	2
114090	Label - Transmission Control	1
114093	Notice - Axle Differential Lock	1
114121	Label - A	1

Part No.	Description	Quantity
114122	Label - B	1
114123	Label - C	1
114124	Label - D	1
114356	Warning - Overturning Hazard, Load Charts	1
114365	Warning - Crush Hazard, Moving Machine	2
114367	Warning - Falling Object Hazard	3
114374	Warning - Crush Hazard, Tires	6
114445	Label - Ignition Switch	1
130687	Load Chart Card, Standard Forks, GTH-644	1
130688	Load Chart Card, Swing Carriage, GTH-644	1
130689	Load Chart Card, Pin-on Bucket, GTH-644	1
130690	Load Chart Card, Pin-on Truss Boom, GTH-644	1
130691	Load Chart Card, Quick Attach Bucket, GTH-644	1
130692	Load Chart Card, Quick Attach Truss Boom, GTH-644	1
130693	Load Chart Card, CAT Attachment, GTH-644	1
130701	Load Chart Card, Standard Forks, GTH-844	1

This inspection continues on the next page.

Inspections

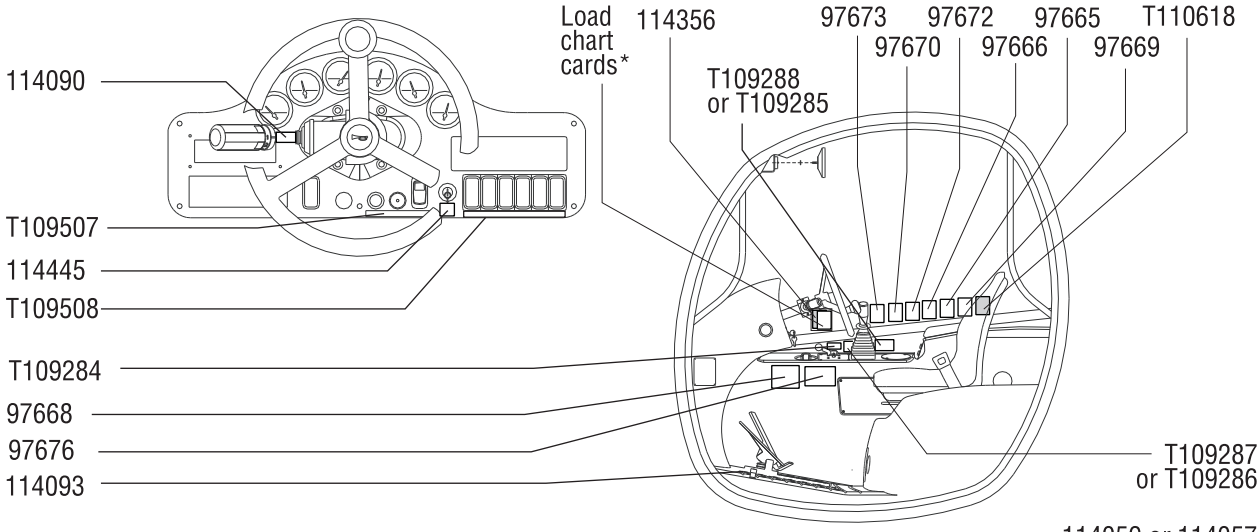

*GTH-644: 130687, 130688, 130689, 130690, 130691, 130692, 130693, T107982
*GTH-844: 130701, 130702, 130703, 130704, 130705, 130706, 130707, 141946

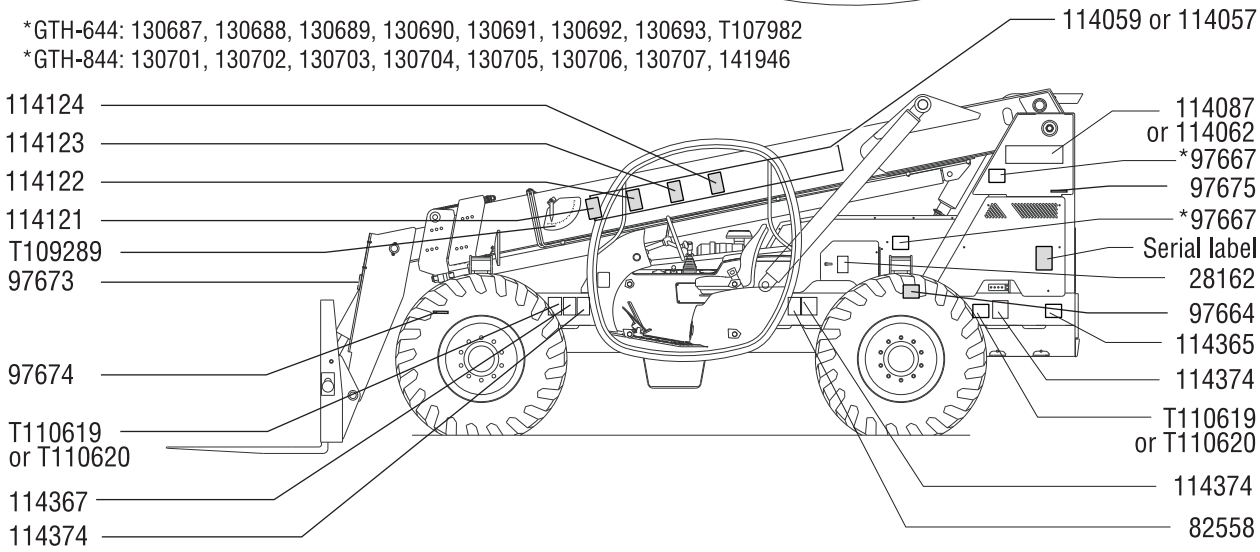

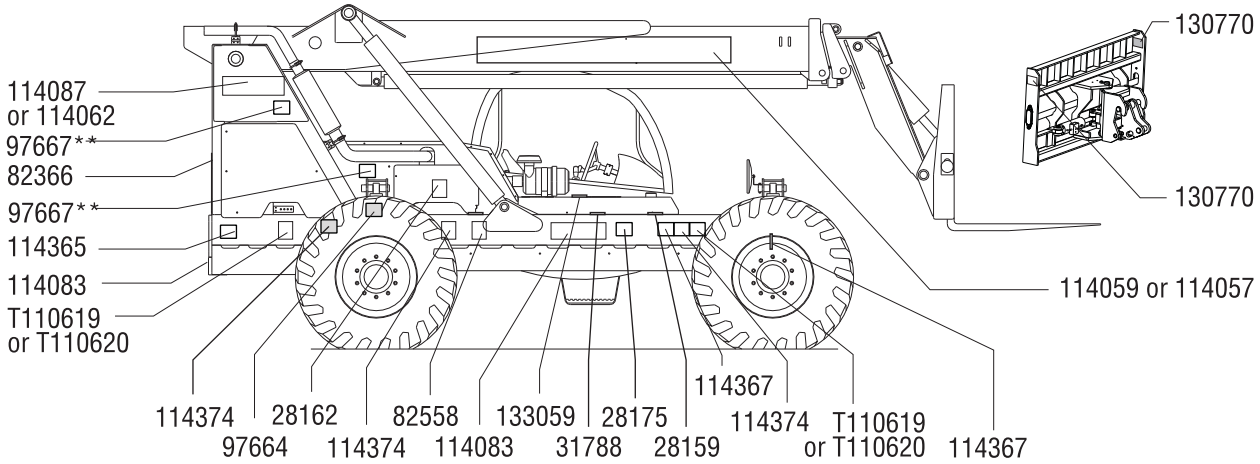

Inspections

Inspection for Decals with Words

Determine whether the decals on your machine have words or symbols. Use the appropriate inspection to verify that all decals are legible and in place.

This inspection is a continuation from the previous page.

Part No.	Description	Quantity
130702	Load Chart Card, Swing Carriage, GTH-844	1
130703	Load Chart Card, Pin-on Bucket, GTH-844	1
130704	Load Chart Card, Pin-on Truss Boom, GTH-844	1
130705	Load Chart Card, Quick Attach Bucket, GTH-844	1
130706	Load Chart Card, Quick Attach Truss Boom, GTH-844	1
130707	Load Chart Card, CAT Attachment, GTH-844	1
133059	Warning - Explosion Hazard	1
141946	Load Chart Card, Quick Attach Swing Carriage, GTH-844	1
T107982	Load Chart Card, Quick Attach Swing Carriage, GTH-644	1
T109284	Label - Steer Model Selector	1
T109285	Label - Auxiliary Hydraulics	1
T109286	Label - Controller (Dual)	1
T109287	Label - Controller (Single)	1
T109288	Label - Stabilizers and Auxiliary Hydraulics	1
T109289	Label - Angle Indicator	1
T109507	Label - Dashboard Accessories	1
T109508	Label - Dashboard Buttons	1
T110618	Warning, Tip-over Hazard	1
T110619	Danger - Tip-over Hazard, Tires	4
T110620	Danger - Tip-over Hazard, Tires	4

Inspections

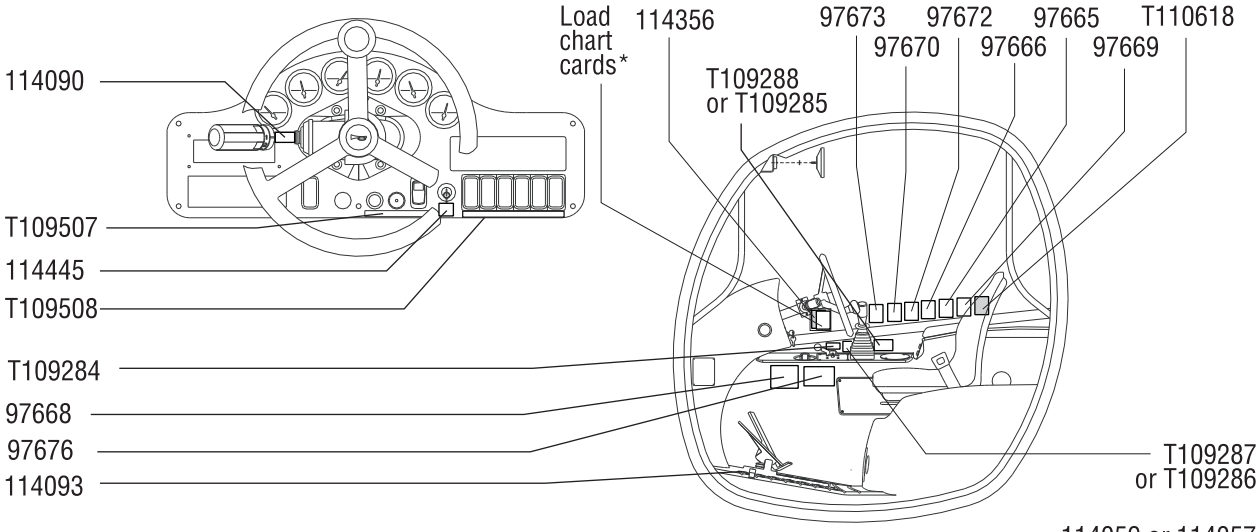

*GTH-644: 130687, 130688, 130689, 130690, 130691, 130692, 130693, T107982
*GTH-844: 130701, 130702, 130703, 130704, 130705, 130706, 130707, 141946

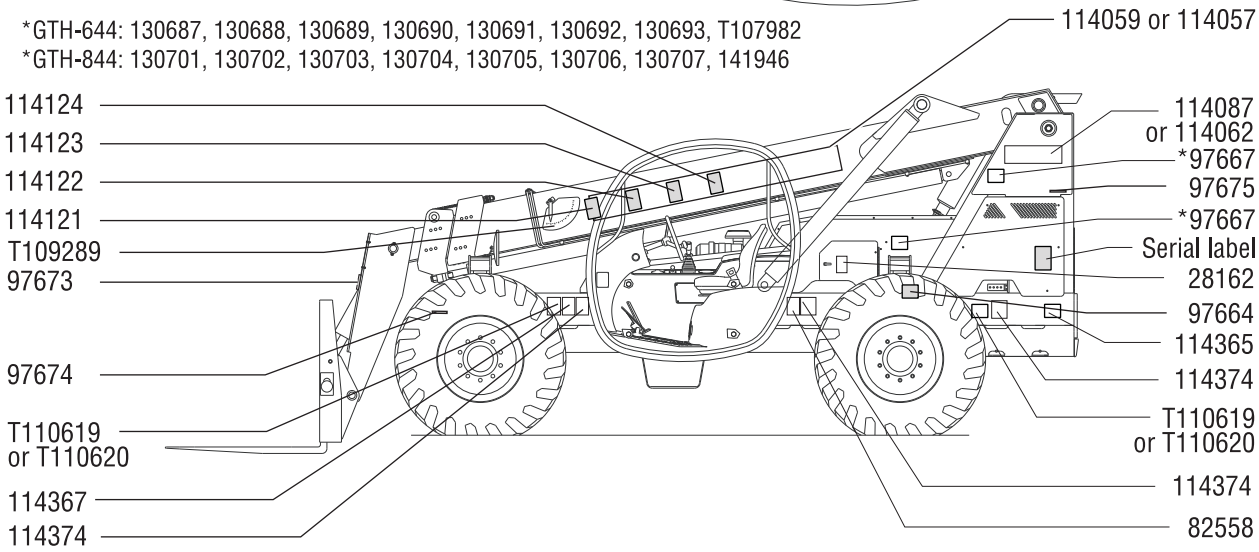

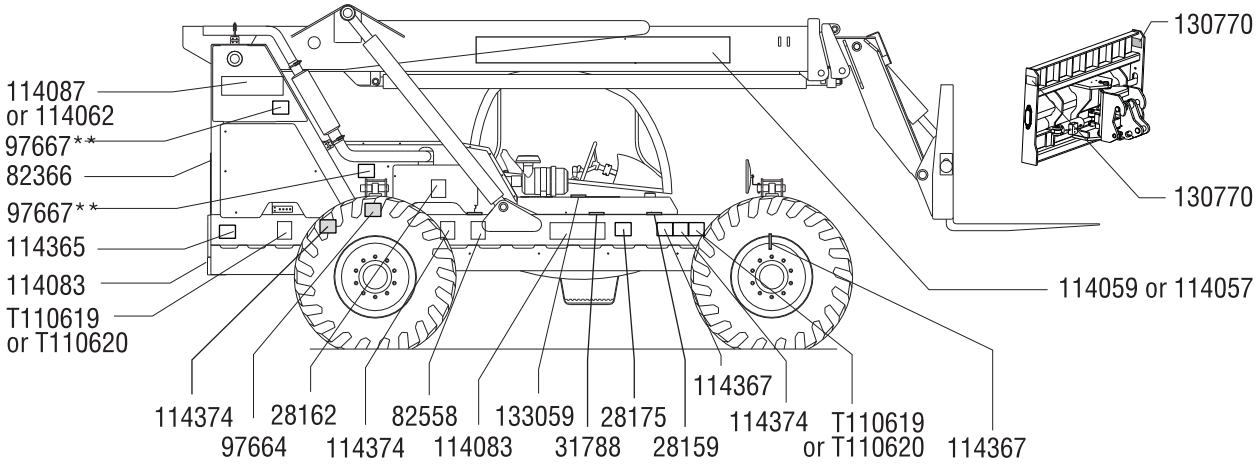

Inspections

Inspection for Decals with Symbols

Determine whether the decals on your machine have words or symbols. Use the appropriate inspection to verify that all decals are legible and in place.

Part No.	Description	Quantity
28159	Label - Diesel	1
82473	Warning - Compartment Access	1
82481	Danger - Explosion/Burn Hazard	1
82487	Warning - Improper Operation	1
82560	Warning - Injection Hazard	2
114057	Cosmetic - Genie GTH-844	2
114059	Cosmetic - Genie GTH-644	2
114062	Cosmetic - GTH-844	2
114083	Cosmetic - Genie	2
114087	Cosmetic - GTH-644	2
114090	Label - Transmission Control	1
114121	Label - A	1
114122	Label - B	1
114123	Label - C	1
114124	Label - D	1
114391	Label - Bodily Injury Hazard	2
114445	Label - Ignition Switch	1
130687	Load Chart Card, Standard Forks, GTH-644	1
130688	Load Chart Card, Swing Carriage, GTH-644	1
130689	Load Chart Card, Pin-on Bucket, GTH-644	1
130690	Load Chart Card, Pin-on Truss Boom, GTH-644	1

Part No.	Description	Quantity
130691	Load Chart Card, Quick Attach Bucket, GTH-644	1
130692	Load Chart Card, Quick Attach Truss Boom, GTH-644	1
130693	Load Chart Card, CAT Attachment, GTH-644	1
130701	Load Chart Card, Standard Forks, GTH-844	1
130702	Load Chart Card, Swing Carriage, GTH-844	1
130703	Load Chart Card, Pin-on Bucket, GTH-844	1
130704	Load Chart Card, Pin-on Truss Boom, GTH-844	1
130705	Load Chart Card, Quick Attach Bucket, GTH-844	1
130706	Load Chart Card, Quick Attach Truss Boom, GTH-844	1
130707	Load Chart Card, CAT Attachment, GTH-844	1
133028	Warning - Falling Object Hazard	1
133029	Warning - Falling Object Hazard	2
133030	Warning - Bodily Injury Hazard	1
133031	Warning - Burn Hazard *Perkins models: decals on right side **JD models: decals on left side	3
133032	Warning - Crush Hazard, Moving Parts	2
133033	Warning - Crush Hazard, Moving Machine	2
133034	Warning - Crush Hazard, Tires	6

This inspection is continued on the next page.

Inspections

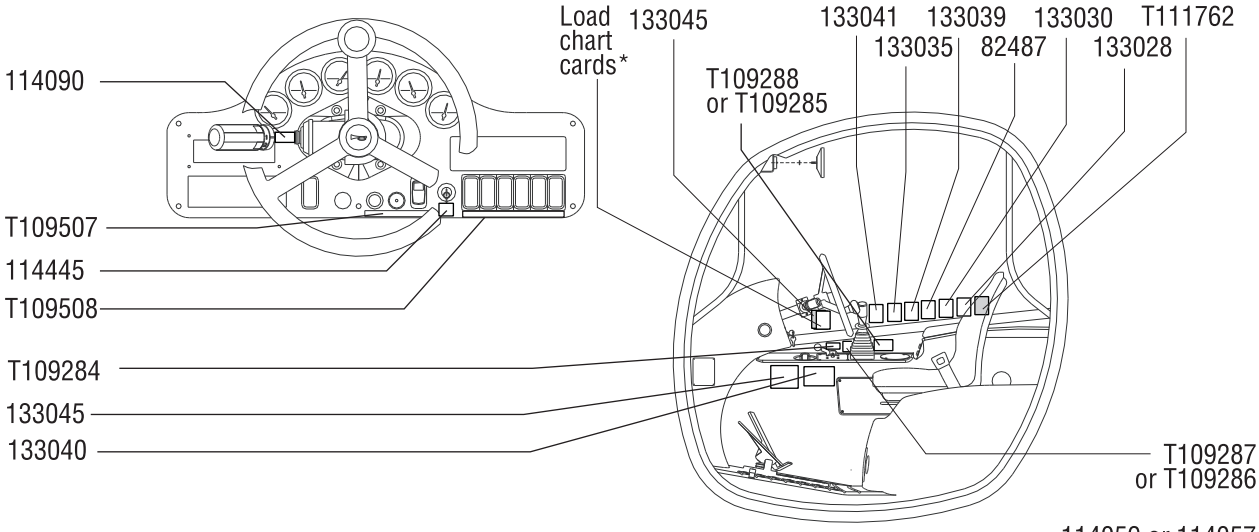

*GTH-644: 130687, 130688, 130689, 130690, 130691, 130692, 130693, T107982
*GTH-844: 130701, 130702, 130703, 130704, 130705, 130706, 130707, 141946

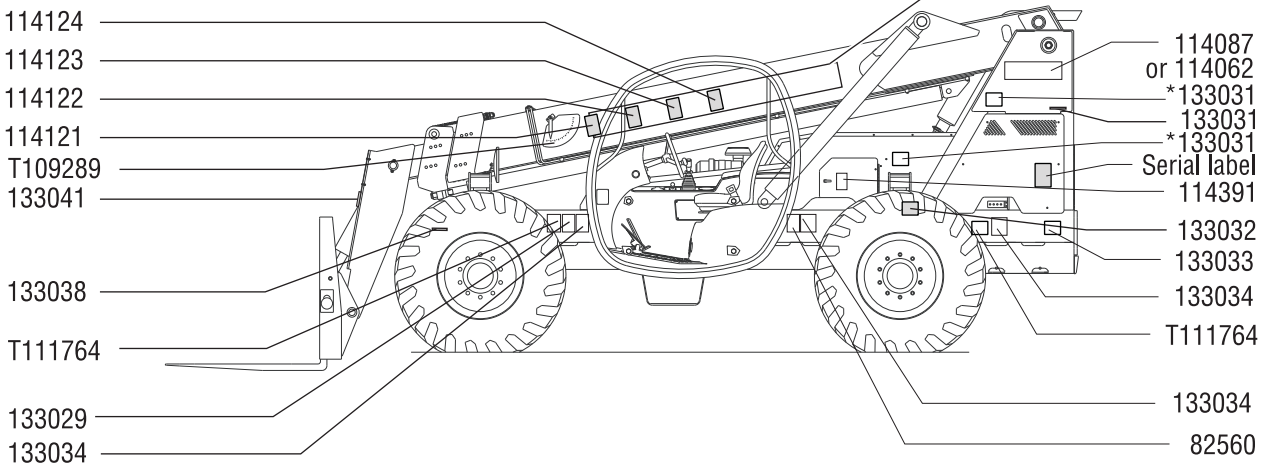

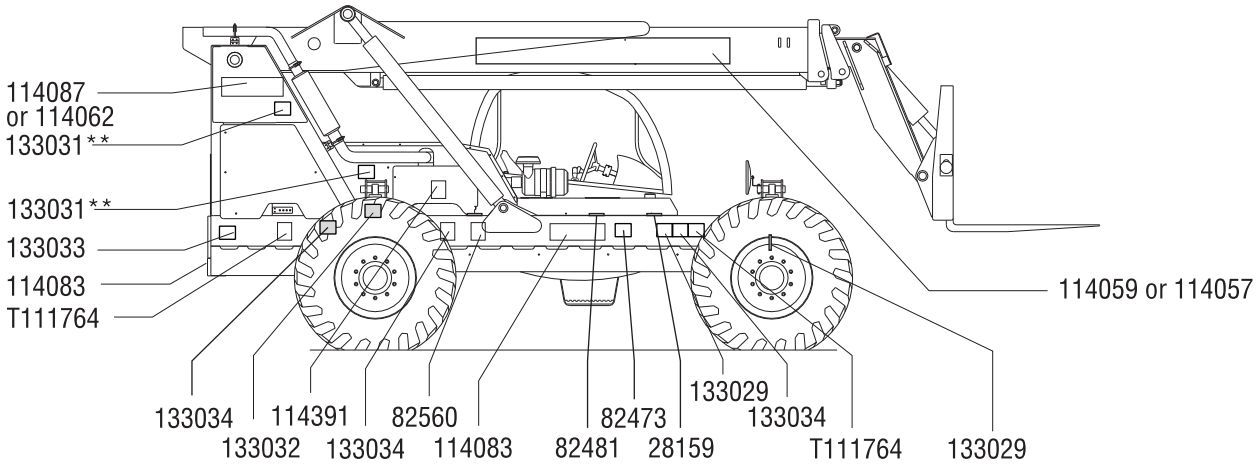

Inspections

Inspection for Decals with Symbols

Determine whether the decals on your machine have words or symbols. Use the appropriate inspection to verify that all decals are legible and in place.

This inspection is a continuation from the previous page.

Part No.	Description	Quantity
133035	Warning - Crush Hazard, Parking Brake	1
133038	Warning - Crush Hazard, Overhead Parts	1
133039	Danger - Crush Hazard, No Riders	1
133040	Danger - Electrocution Hazard	1
133041	Danger - Fall Hazard, No Riders	2
133045	Warning - Overturning Hazard, Load Charts	2
141946	Load Chart Card, Quick Attach Swing Carriage, GTH-844	1
T107982	Load Chart Card, Quick Attach Swing Carriage, GTH-644	1
T109284	Label - Steer Selector	1
T109285	Label - Auxiliary Hydraulics	1
T109286	Label - Single Controller	1
T109287	Label - Dual Controller	1
T109288	Label - Sway and Auxiliary Hydraulics	1
T109289	Label - Boom Angle Indicator	1
T109507	Label - Dashboard Buttons	1
T109508	Label - Dashboard Switches, Options	1
T111762	Label - Tip-over, Sway	1
T111764	Label - Tip-over, Tires	4

Inspections

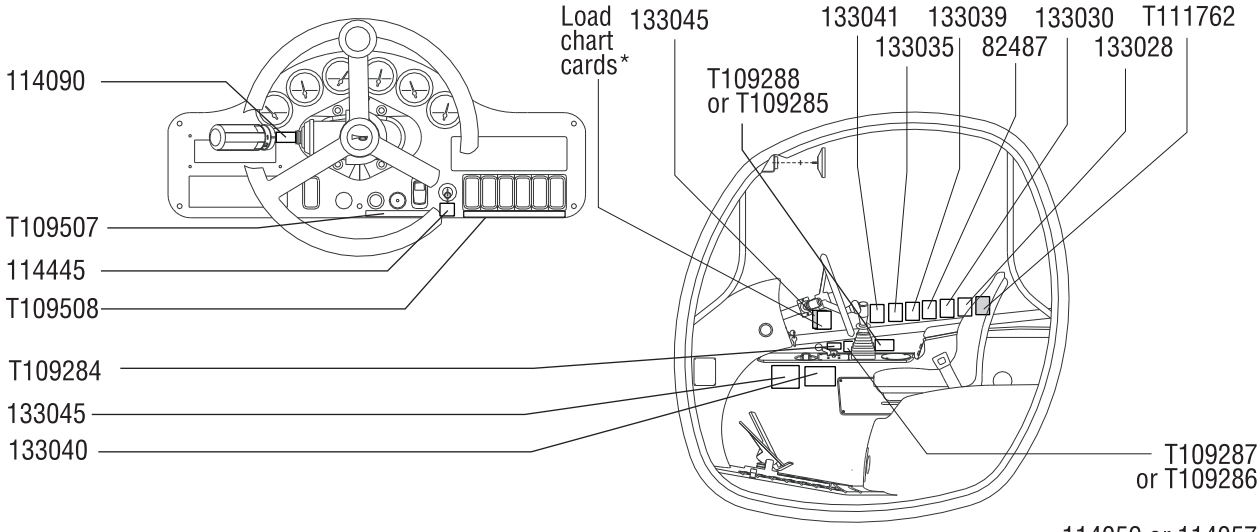

*GTH-644: 130687, 130688, 130689, 130690, 130691, 130692, 130693, T107982
*GTH-844: 130701, 130702, 130703, 130704, 130705, 130706, 130707, 141946

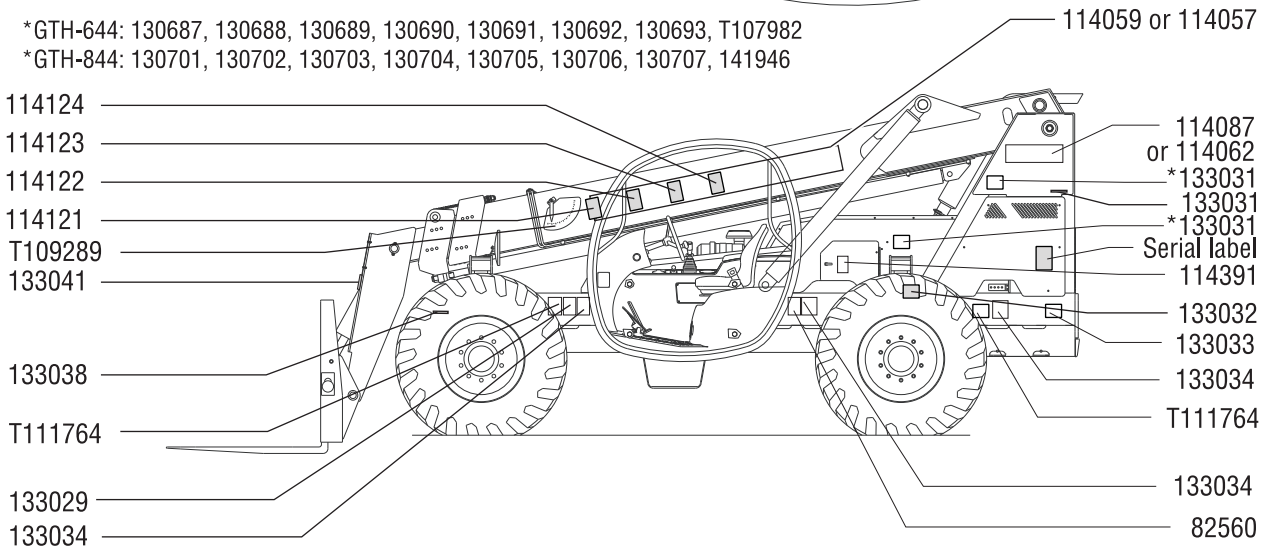

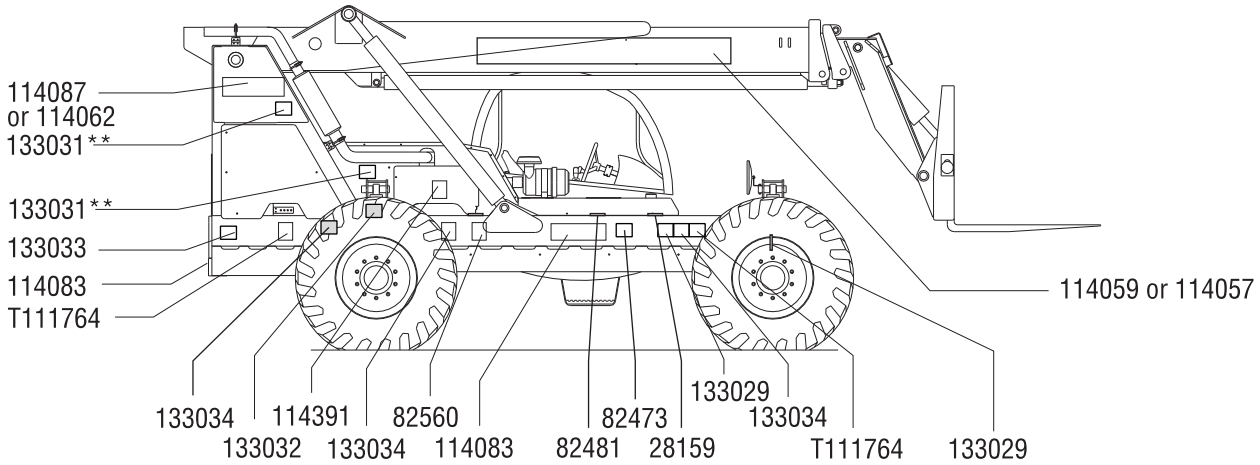

Operating Instructions

Do Not Operate Unless:

☑ You learn and practice the principles of safe machine operation contained in this operator's manual.

1 Avoid hazardous situations.

2 Always perform a pre-operation inspection.

3 Always perform function tests prior to use.

4 Inspect the workplace.

5 Only use the machine as it was intended.

Fundamentals

The Operating Instructions section provides instructions for each aspect of machine operation. It is the operator's responsibility to follow all the safety rules and instructions in the operator's and safety manuals.

A variable reach rough terrain forklift truck is defined as a wheeled type truck designed primarily as a fork truck with a pivoted boom, which may be equipped with attachments for lifting material. Using it for any other use is unsafe and dangerous.

Only trained and authorized personnel should be permitted to operate a machine. If more than one operator is expected to use a machine at different times in the same work shift, they must all be qualified operators and are all expected to follow all safety rules and instructions in the operator's and safety manuals. That means every new operator should perform a pre-operation inspection, function tests, and a workplace inspection before using the machine.

Operating Instructions

Parking Brake

Use the parking brake switch to apply the parking brake before raising the boom or leaving the machine.

Push the top of the rocker switch to turn the parking brake on.

Push the bottom of the switch to turn the parking brake off.

Service Brake

Use the service brake pedal to control the machine speed and to stop the machine motion.

Push and hold the service brake pedal to stop the machine.

Push and release the service brake pedal to control the machine speed.

Starting the Engine

1 Be sure the parking brake is set and the transmission control lever is in the neutral position.

2 Insert the key in the ignition switch.

3 Turn the key until the engine starts.

If the engine fails to start after 30 seconds of cranking, determine the cause and repair any malfunction. Wait 120 seconds before trying to start again.

Push and hold the glow plug button (if equipped) for 10 seconds to turn on the glow plugs. After 10 seconds, release the button and start the engine.

Push and hold the ether starting aid (if equipped) while starting the engine. When smoke appears from the exhaust, release the button. In cold weather, if the engine does not start, use the ether starting aid again.

Steer Select

Always position all wheels in line with the machine before switching the steering mode.

Do not realign the wheels while driving.

Steer selector switch

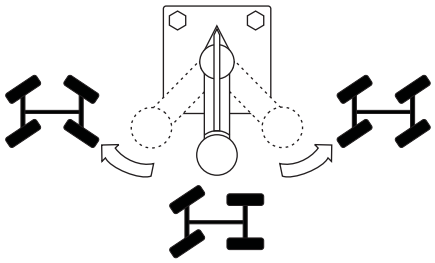

Operating Instructions

Transmission Control

Use the transmission control lever to control the speed and direction of machine travel.

Step on the service brake pedal before putting the transmission into gear.

To drive forward, move the transmission control lever toward you and move it up.

To drive in reverse, move the transmission control lever toward you and move it down.

To return to neutral, move the transmission control lever to the center position.

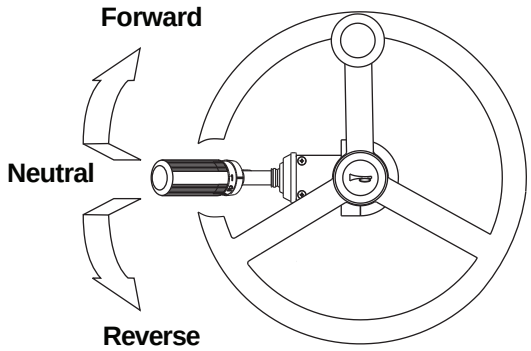

The transmission control lever also controls the transmission speed.

To choose a lower speed, rotate the control lever clockwise.

To choose a higher speed, rotate the control lever counterclockwise.

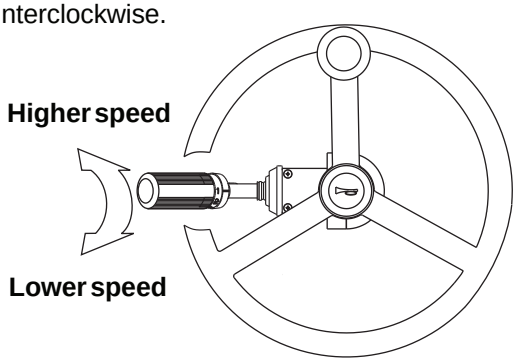

When shifting the transmission from forward to reverse while the machine is in motion, the transmission control lever must be in 1st or 2nd gear only.

Forward / 1st gear: Low speed / high torque

Forward / 2nd gear: Medium speed / medium torque

Forward / 3rd gear: High speed / low torque

Axle Differential Lock

Use the axle differential lock switch to lock the axle differential and gain added traction in certain types of terrain such as sand, mud or snow.

Come to a complete stop before activating the axle differential lock. Do not lock the axle when the machine is moving.

Push and hold the lock switch to activate the axle differential lock. Release the switch to release the differential lock.

Hydraulic Disable Button

Pushing the hydraulic disable button will cause immediate loss of hydraulic power to hydraulic components. Only push the hydraulic disable button while the machine is parked, to assist in starting the engine in cold climates.

1 Push and hold the hydraulic disable button while starting the engine.

2 Continue to hold the button for 15 - 20 seconds after the engine starts.

3 Once the engine is running smoothly, release the button and the hydraulic pump will engage.

Operating Instructions

Frame Sway Control

Before raising the boom, the machine must be level.

1 Check the machine level indicator. The machine level indicator should be at 0 degrees before raising the boom.

2 If the machine is not level, use the frame sway control function to level the machine.

⚠ Only use the frame sway control function if the boom angle indicator is at 0 degrees or less.

Frame sway with single control handle

Push down on the right side of the rocker switch and the machine will sway to the right. Push down on the left side of the rocker switch and the machine will sway to the left.

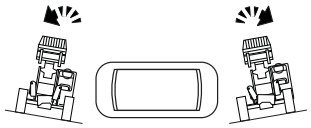

Frame sway with dual control handle

Push the control handle to the right and the machine will sway to the right.

Pull the control handle to the left and the machine will sway to the left.

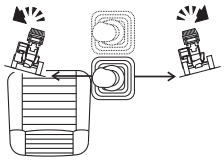

Transporting a Load

Center the load on the forks. Position the load so that it is completely against the back of the fork frame.

The load should be kept as low to the ground as possible while traveling. Always move a loaded machine with the boom angle indicator at 0 degrees or less.

Tilt the forks back slightly to help keep the load secure.

Always bring the machine to a complete stop before applying the parking brake.

Raising and Placing a Load

The load chart in the cab shows the operating limits of a properly maintained and operated machine. To use the load chart, the operator must know the weight of the load and how far out and up it is to be placed.

This machine has more than one load chart. Be sure you are using the load chart that corresponds to the attachment on the machine.

If you determine that the weight of the load cannot be placed at the height and angle you want, these options can be used:

1 Move the machine closer to the loading or pick point so that the weight of the load will meet the load chart specifications.

2 Divide the load into smaller pieces so that each piece meets the load chart specifications.

3 Obtain a larger machine capable of handling the load within specifications.

Operating Instructions

Placing the load

1 Travel to the desired work site and carefully stop the machine.

2 Put the transmission in neutral.

3 Apply the parking brake.

4 Level the frame, if the machine angle indicator is not at 0.

5 Gradually move the controller to raise and extend the boom to the required height.

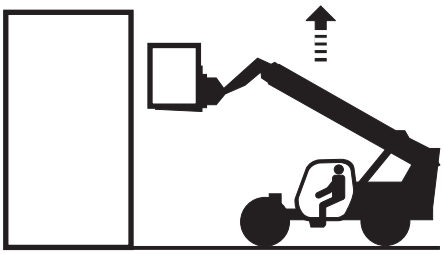

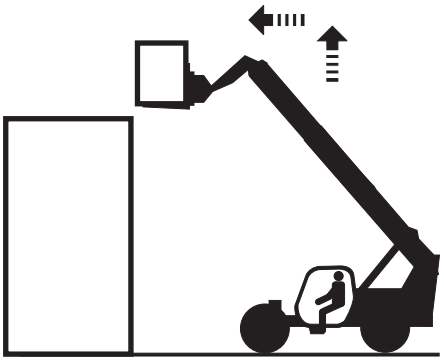

6 Gradually move the controller to lower and extend the boom into final position. Lower the load until the weight is completely off the forks. Do not apply a downward force with the forks.

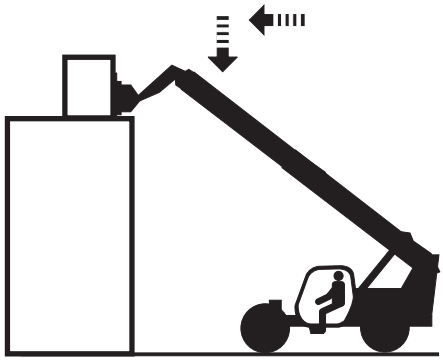

7 Gradually move the controller to raise and retract the boom. This will bring the forks out of the load.

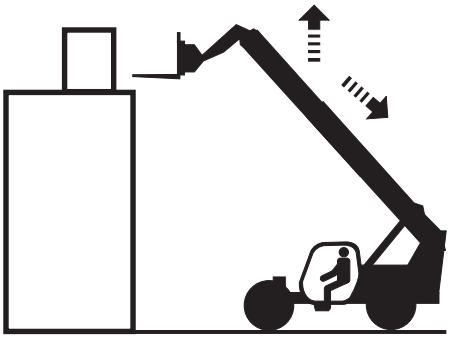

8 When the forks are clear of the load and the structure, the boom can be lowered.

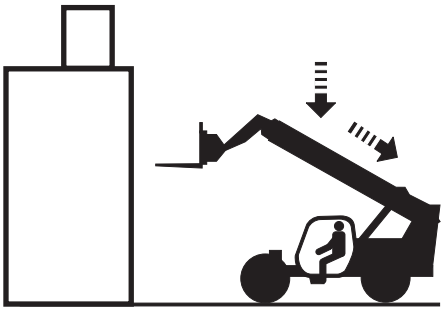

Operating Instructions

Controller movements - Single Control Handle

Control handle only

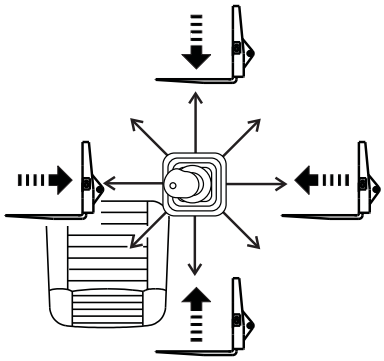

Control handle with thumb switch

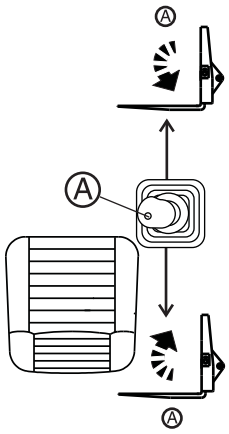

Controller movements - Dual Control Handles

Boom control handle

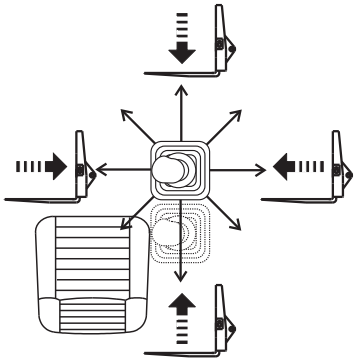

Tilt and sway control handle

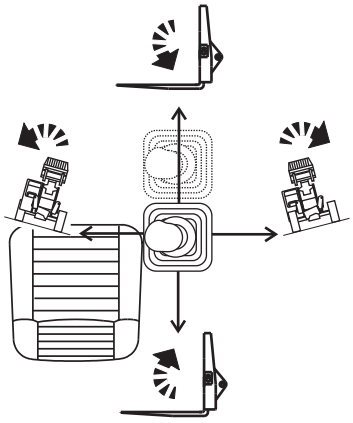

Operating Instructions

Rear Axle Lock

If the boom is raised above 60°, the transmission will shift to neutral and the frame sway function will not operate.

Boom and fork functions will continue to operate.

Lower the boom to below horizontal to unlock the rear axle and to operate the frame sway function.

After Each Use

1 Select a safe parking location—firm level surface, clear of obstruction and traffic.

2 Retract and lower the boom to the stowed position.

3 Set the parking brake and move the transmission control level to neutral.

4 Turn the key switch to the off position and remove the key to secure the machine from unauthorized use.

5 Chock the wheels.

Jump Starting the Machine

Jump starting at the battery or battery replacement is required when the battery is discharged to the point where the battery will not crank the starter.

⚠ Never jump start the machine directly to the starter or the starter solenoid. Serious injury or death could result from the machine moving forward or backward.

⚠ To avoid personal injury when jump starting with another machine, be certain that the machines are not touching.

⚠ Never jump start a frozen battery as it will explode.

⚠ Keep sparks and flames away from the battery. Lead acid batteries generate explosive gases when charging. Wear safety glasses when working near batteries.

The booster battery must be 12V. The machine used for jump starting must have a negative ground electrical system.

To jump start the machine

1 Connect the positive (+) jumper cable to the positive (+) post of the discharged battery.

2 Connect the other end of the same jumper cable to the positive (+) post of the booster battery.

3 Connect one end of the second jumper cable to the negative (-) post of the booster battery.

4 Make the final cable connection to the engine block or the furthest ground point away from the battery.

5 Start the engine.

Operating Instructions

Driving on a slope

When the machine is loaded, always travel with the load uphill. When the machine is unloaded, travel with the forks or attachment downhill.

On steep terrain, drive only up and down hill, and always keep the machine in gear. Do not turn across the slope when machine is traveling up or down a slope.

Limit travel path and speed according to the condition of the ground surface, traction, slope, location of personnel and any other factors which may create a hazard. Never drive the machine unless the boom, attachment and load are in their proper travel positions.

Whether a machine will tip over during dynamic machine operation involves many variables that need to be considered. Among these are pavement/ground conditions, stability and slope, as well as machine equipment, operator skill, load position, tire inflation, machine speed, etc.

Additionally, tip over of a machine is dependent in large part upon operator inputs such as the speed and smoothness of the operation as well as the position of the attachment and its load.

Construction sites and roads will frequently change slope from place to place, can be hard and soft, and change due to the construction activities and weather.

Operators should be properly trained and use their best judgment and experience to take the necessary precautions to prevent tip over.

Operators must assess the jobsite variables and avoid exceeding the machine's (or operator's) capabilities for terrain and conditions.

Transport Instructions

Observe and Obey:

- ☑ Genie Industries provides this securement information as a recommendation. Drivers are solely responsible for making sure machines are properly secured and the correct trailer is selected pursuant to US Department of Transportation regulations, other localized regulations, and their company policy.
- ☑ Genie customers needing to containerize any lift or Genie product should source a qualified freight forwarder with expertise in preparing, loading and securing construction and lifting equipment for international shipment.
- ☑ Only qualified operators should move the machine on or off the truck.
- ☑ The transport vehicle must be parked on a level surface.
- ☑ The transport vehicle must be secured to prevent rolling while the machine is being loaded.
- ☑ Be sure the vehicle capacity, loading surfaces and chains or straps are sufficient to withstand the machine weight. Genie lifts are very heavy relative to their size. See the serial label for the machine weight. See the Inspections section for the serial label location.

⚠ Securing to Truck or Trailer for Transit

Turn the key switch to the off position and remove the key before transporting.

Inspect the entire machine for loose or unsecured items.

Securing the Chassis

Use chains of ample load capacity.

Use a minimum of 4 chains. There are 4 tie down points on the chassis.

Adjust the rigging to prevent damage to the chains.

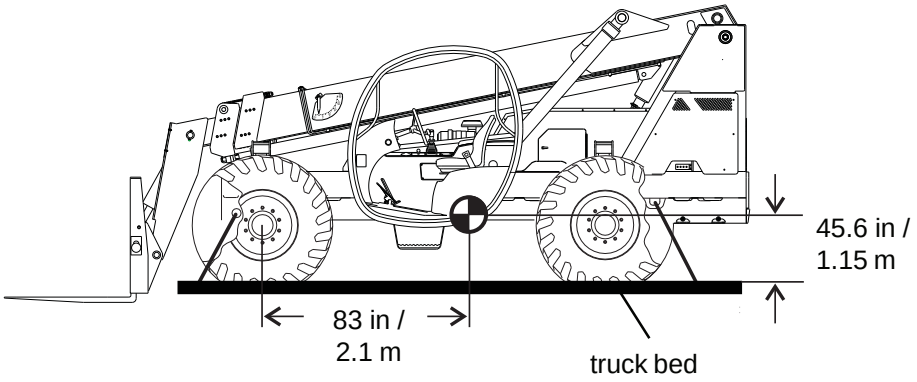

Maintenance

Observe and Obey:

- ☑ Only routine maintenance items specified in this manual shall be performed by the operator.
- ☑ Scheduled maintenance inspections shall be completed by qualified service technicians, according to the manufacturer's specifications and the requirements specified in the responsibilities manual.

Maintenance Symbols Legend

The following symbols have been used in this manual to help communicate the intent of the instructions. When one or more of the symbols appear at the beginning of a maintenance procedure, it conveys the meaning below.

Indicates that tools will be required to perform this procedure.

Indicates that new parts will be required to perform this procedure.

Indicates that a cold engine is required before performing this procedure.

Check the Engine Oil Level

Maintaining the proper engine oil level is essential to good engine performance and service life. Operating the machine with an improper oil level can damage engine components.

Check the oil level with the engine off.

1 Check the engine oil dipstick. Add oil as needed.

John Deere 4045TF270 Engine	
Oil type	15W-40
Perkins 1104C-44T Engine	
Oil type	15W-40

Maintenance

Check the Hydraulic Oil Level

Maintaining the hydraulic oil at the proper level is essential to machine operation. Improper hydraulic oil levels can damage hydraulic components. Daily checks allow the inspector to identify changes in the oil level that might indicate the presence of hydraulic system problems.

1 Be sure that the engine is off, the frame is level and the boom is in the stowed position.

2 Visually inspect the sight gauge on the hydraulic tank. The hydraulic oil level should be halfway in the sight gauge.

3 Add oil as needed.

Hydraulic oil specifications	
Hydraulic oil type	Chevron Rando HD equivalent

Check the Batteries

Proper battery condition is essential to good engine performance and operational safety. Improper fluid levels or damaged cables and connections can result in engine component damage and hazardous conditions.

Electrocution/burn hazard. Contact with hot or live circuits may result in death or serious injury. Remove all rings, watches and other jewelry.

Bodily injury hazard. Batteries contain acid. Avoid spilling or contacting battery acid. Neutralize battery acid spills with baking soda and water.

1 Be sure that the battery cable connections are tight and free of corrosion.

2 Be sure that the battery hold-down bar is in place and secure.

Adding terminal protectors and a corrosion preventative sealant will help eliminate corrosion on the battery terminals and cables.

Maintenance

Check the Engine Coolant Level - Liquid Cooled Models

Maintaining the engine coolant at the proper level is essential to engine service life. An improper coolant level will affect the engine's cooling capability and damage engine components. Daily checks will allow the inspector to identify changes in coolant level that might indicate cooling system problems.

1 Check the fluid level in the coolant recovery tank. Add fluid as needed.

⊙ Result: The fluid level should be visible in the top of the tank.

Bodily injury hazard. Fluids in the radiator are under pressure and extremely hot. Use caution when removing cap and adding fluids.

Check the Tire Pressure

Tip-over hazard. An overinflated tire can explode which may compromise machine stability and cause the machine to tip over.

Tip-over hazard. The use of temporary flat tire repair products may lead to tire failure which could compromise machine stability and cause the machine to tip over.

Bodily injury hazard. An overinflated tire can explode and may cause death or serious injury.

This procedure does not need to be performed on machines equipped with ballast-filled tires.

1 Check each tire with an air pressure gauge and add air as needed.

Tire pressure	62 psi	4.3 bar

Scheduled Maintenance

Maintenance performed quarterly, annually and every two years must be completed by a person trained and qualified to perform maintenance on this machine according to the procedures found in the service manual for this machine.

Machines that have been out of service for more than three months must receive the quarterly inspection before they are put back into service.

Specifications

GTH-644		
Height, stowed	8 ft 11 in	2.5 m
Length, stowed, without forks	19 ft 10 in	6.0 m
Width, standard tires	8 ft 6 in	2.6 m
Wheelbase	10 ft 10 in	3.0 m
Ground clearance, center	1 ft 5 in	46 cm
Ground clearance, axle	1 ft 5 in	46 cm
Weight Machine weight can vary with option configurations.	21,500 lbs	9752 kg
Working fork height, maximum	44 ft	13.4 m
Horizontal reach, maximum	27 ft	8.2 m
Reach at maximum height	3 ft 6 in	1.0 m
Lift capacity, maximum height	6000 lbs	2722 kg
Lift capacity, maximum reach	2000 lbs	907 kg
Maximum lift capacity	6000 lbs	2722 kg
Drive speed, maximum	17 mph	27.4 km/h
Tire size		13 x 24, 12 ply
Turning radius, outside, 2 wheel steer	22 ft 6 in	6.8 m
Turning radius, outside, 4 wheel steer	14 ft 9 in	4.5 m
Fuel tank capacity	30 gal	113.6 liter
Floor loading information		
Tire load, maximum	13,740 lbs	6232 kg
Occupied floor pressure	136 psf	1350 bar

GTH-844		
Height, stowed	8 ft 11 in	2.5 m
Length, stowed, without forks	20 ft	6.1 m
Width, standard tires	8 ft 6 in	2.6 m
Wheelbase	10 ft 10 in	3.0 m
Ground clearance, center	1 ft 5 in	46 cm
Ground clearance, axle	1 ft 5 in	46 cm
Weight Machine weight can vary with option configurations.	22,500 lbs	10,206 kg
Working fork height, maximum	44 ft	13.4 m
Horizontal reach, maximum	27 ft	8.2 m
Reach at maximum height	3 ft 6 in	1.0 m
Lift capacity, maximum height	6000 lbs	2722 kg
Lift capacity, maximum reach	2000 lbs	907 kg
Maximum lift capacity	8000 lbs	3629 kg
Drive speed, maximum	17 mph	27.4 km/h
Tire size		13 x 24, 12 ply
Turning radius, outside, 2 wheel steer	22 ft 6 in	6.8 m
Turning radius, outside, 4 wheel steer	14 ft 9 in	4.5 m
Fuel tank capacity	30 gal	113.6 liter
Floor loading information		
Tire load, maximum	15,160 lbs	6891 kg
Occupied floor pressure	149 psf	1479 bar

Load Charts

GTH-644 Standard Carriage

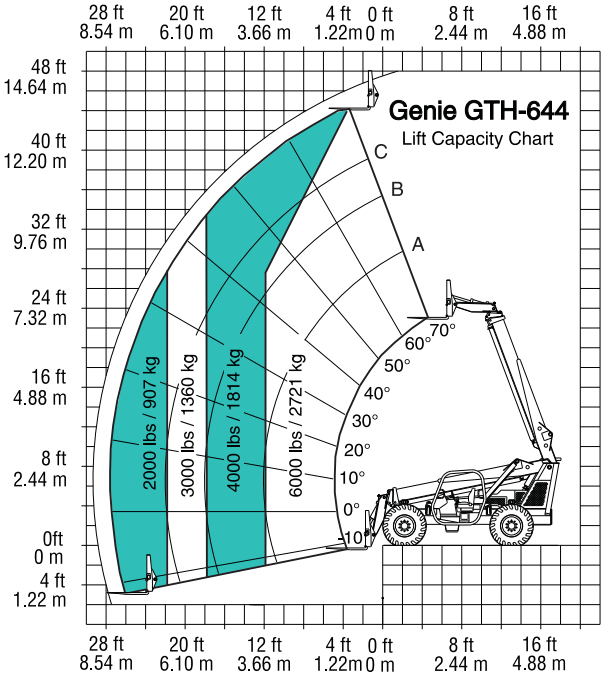

GTH-644 Swing Carriage

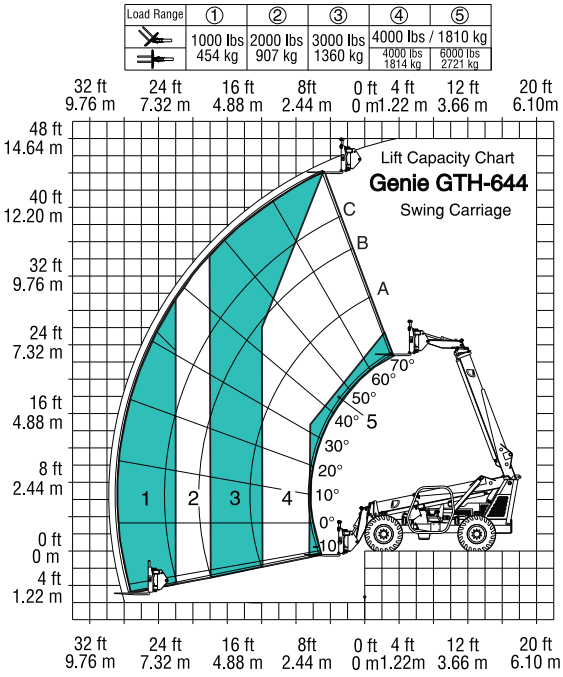

GTH-644 Pin-on Bucket

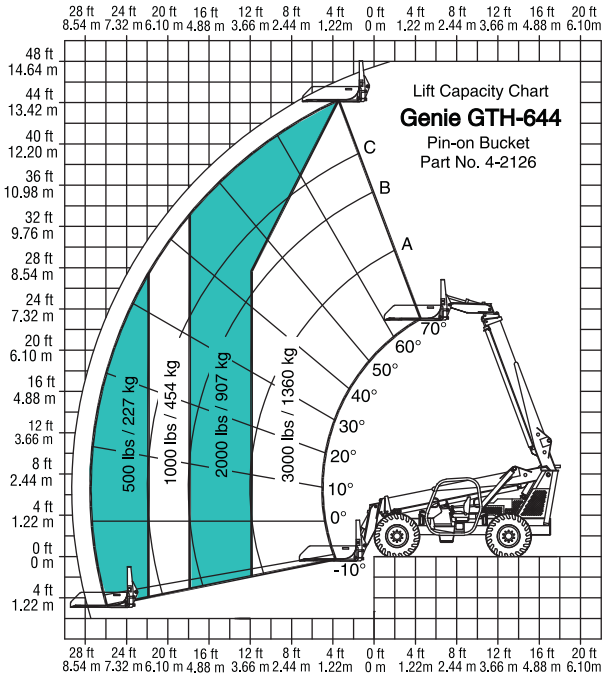

GTH-644 Pin-on Truss Boom

Truss Position	First	Second	Third	Fourth
Load Range A	2000 lbs / 907 kg	1500 lbs / 680 kg	1000 lbs / 454 kg	750 lbs / 340 kg
Load Range B				
Load Range C	1000 lbs / 454 kg			
Load Range D	500 lbs / 227 kg			

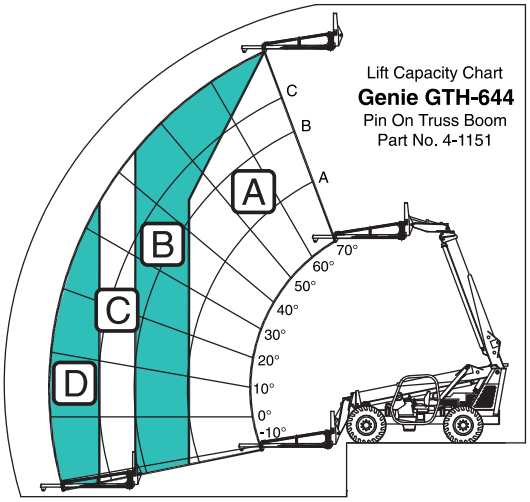

Load Charts

GTH-644 Quick Attach Bucket

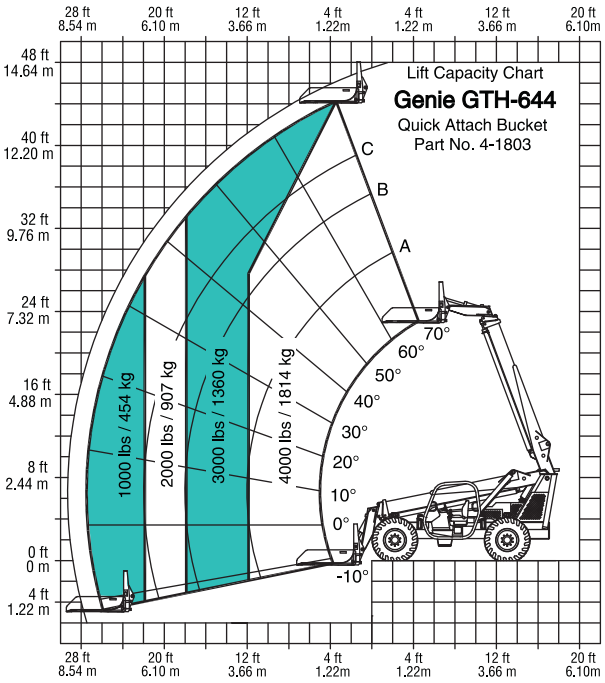

GTH-644 Quick Attach Truss Boom

Truss Position		First	Second	Third	Fourth
Load Range	A	1500 lbs / 680 kg	1000 lbs / 454 kg	1000 lbs / 454 kg	750 lbs / 340 kg
	B	2000 lbs / 907 kg	1500 lbs / 680 kg		

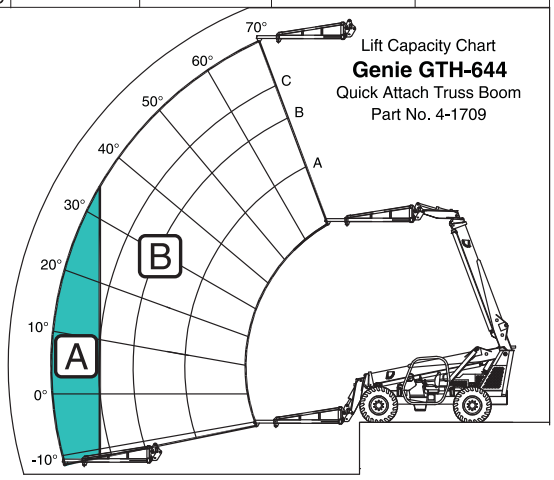

GTH-644 CAT Attachment

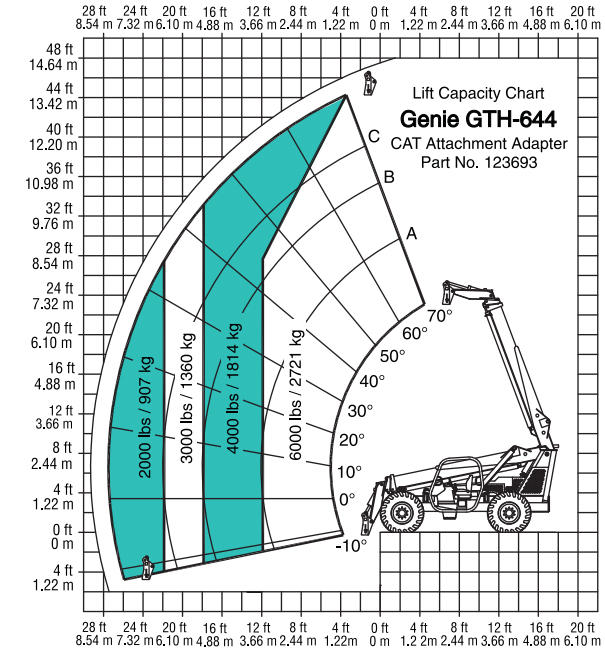

GTH-644 Quick Attach Swing Carriage

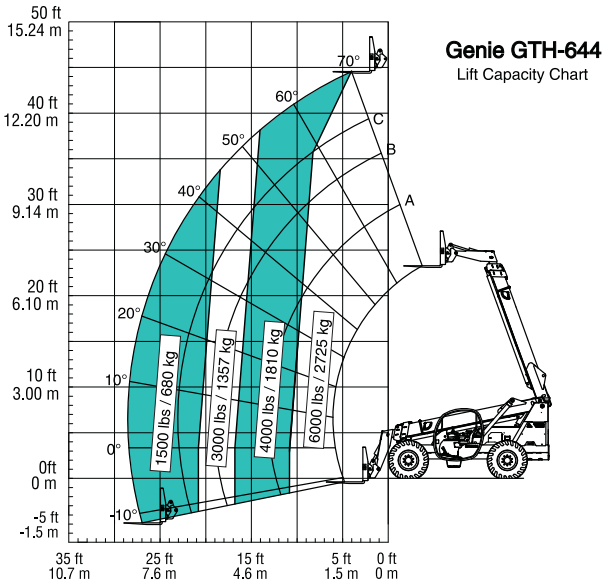

Capacity includes weight of attachments

Load Charts

GTH-844 Standard Carriage

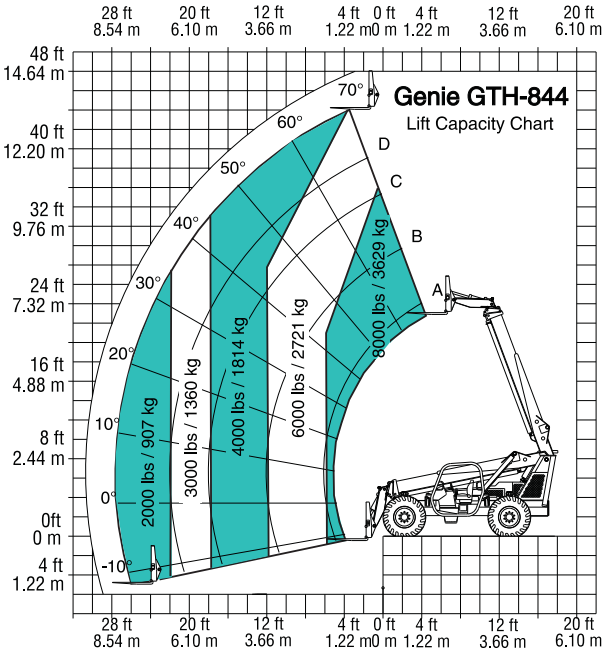

GTH-844 Swing Carriage

Load Range	①	②	③	④	⑤
	1000 lbs 454 kg	2000 lbs 907 kg	3000 lbs 1360 kg	4000 lbs / 1814 kg	
				4000 lbs 1814 kg	8000 lbs 3629 kg

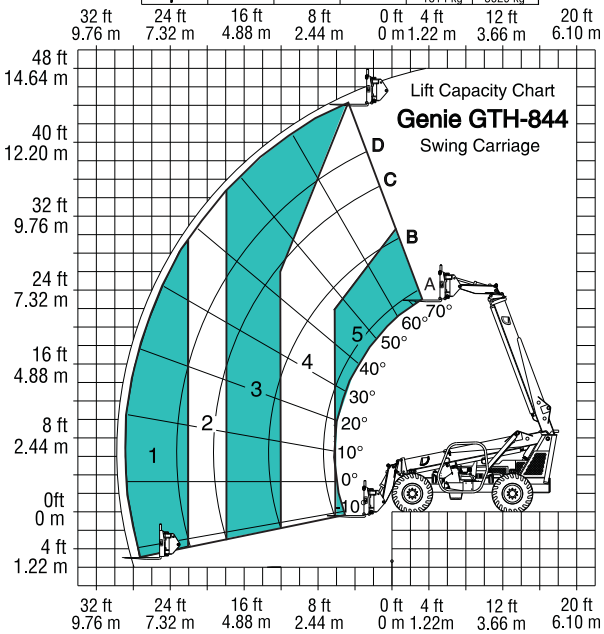

GTH-844 Pin-on Bucket

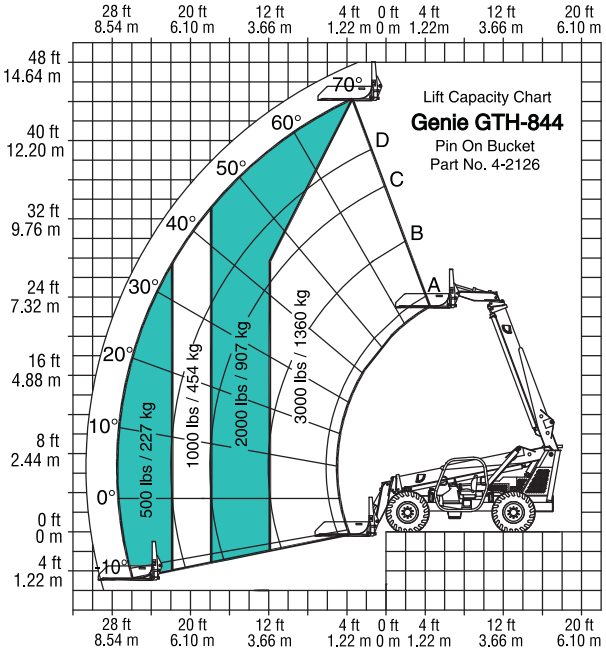

GTH-844 Pin-on Truss Boom

Truss Position	First	Second	Third	Fourth
Load Range A, B	2000 lbs / 907 kg	1500 lbs / 680 kg	1000 lbs / 454 kg	750 lbs / 340 kg
Load Range C	1000 lbs / 454 kg			
Load Range D	500 lbs / 227 kg			

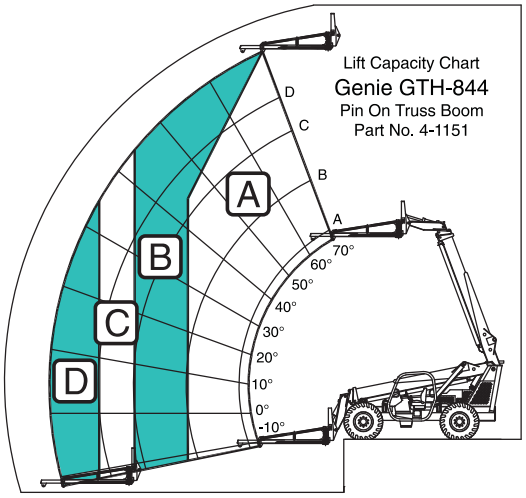

Load Charts

GTH-844 Quick Attach Bucket

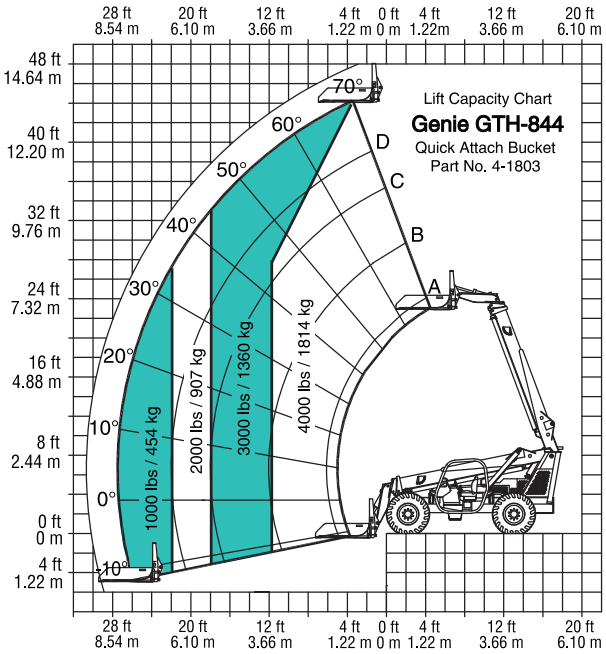

GTH-844 Quick Attach Truss Boom

Truss Position		First	Second	Third	Fourth
Load Range	A	1500 lbs / 680 kg	1000 lbs / 454 kg	1000 lbs / 454 kg	750 lbs / 340 kg
	B	2000 lbs / 907 kg	1500 lbs / 680 kg		

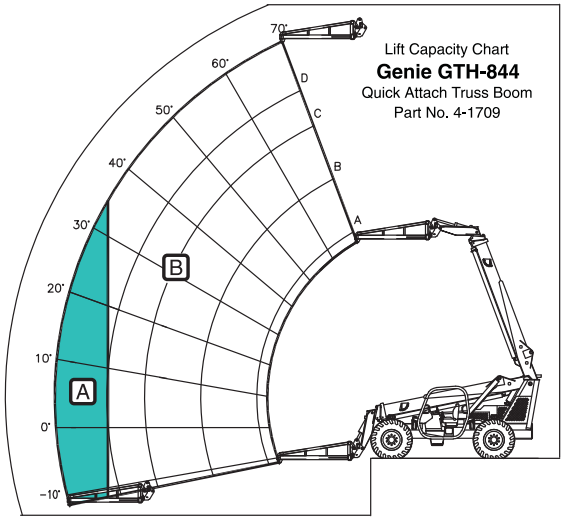

GTH-844 CAT Attachment

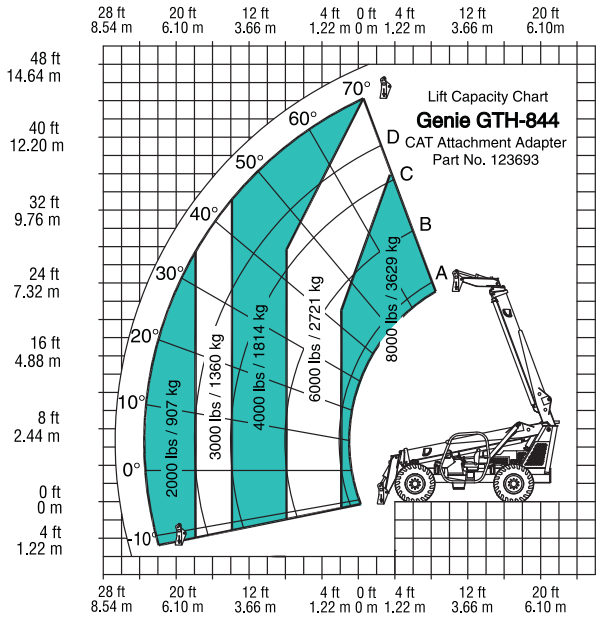

Capacity includes weight of attachments

GTH-844 Quick Attach Swing Carriage

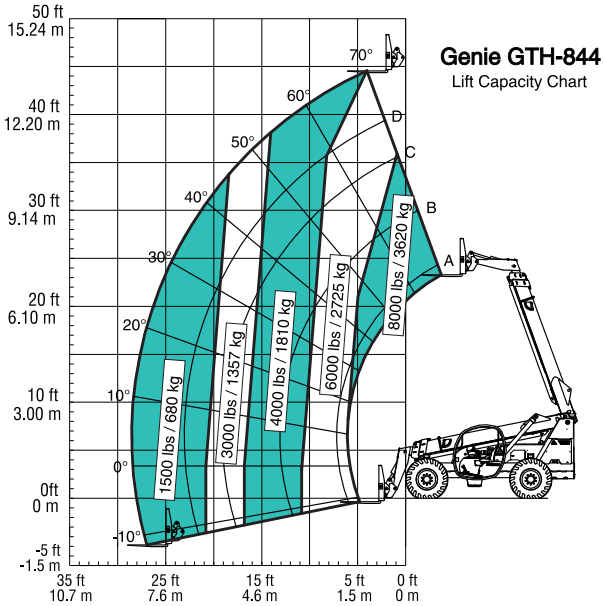

California Proposition 65

Warning

The exhaust from this product contains chemicals known to the State of California to cause cancer, birth defects or other reproductive harm.

Distributed By:

Genie North America
Phone 425.881.1800
Toll Free USA and Canada 800.536.1800
Fax 425.883.3475

Genie Australia Pty Ltd.
Phone +61 7 3375 1660
Fax +61 7 3375 1002

Genie China
Phone +86 21 53852570
Fax +86 21 53852569

Genie Malaysia
Phone +65 98 480 775
Fax +65 67 533 544

Genie Japan
Phone +81 3 3453 6082
Fax +81 3 3453 6083

Genie Korea
Phone +82 25 587 267
Fax +82 25 583 910

Genie Brasil
Phone +55 11 41 665 755
Fax +55 11 41 665 754

Genie Holland
Phone +31 183 581 102
Fax +31 183 581 566

Genie Scandinavia
Phone +46 31 575100
Fax +46 31 579020

Genie France
Phone +33 (0)2 37 26 09 99
Fax +33 (0)2 37 26 09 98

Genie Iberica
Phone +34 93 579 5042
Fax +34 93 579 5059

Genie Germany
Phone 0800 180 9017
Phone +49 422 149 1818
Fax +49 422 149 1820

Genie U.K.
Phone +44 (0)1476 584333
Fax +44 (0)1476 584334

Genie Mexico City
Phone +52 55 5666 5242
Fax +52 55 5666 3241